<ORIGINAL>

MITSUBISHI ELECTRIC

CITY MULTI

Air-Conditioners For Building Application

OUTDOOR UNIT

PURY-P-YNW-A2/TR2(-BS)
PURY-EP-YNW-A2/TR2(-BS)

For use with R410A

INSTALLATION MANUAL
For safe and correct use, please read this installation manual thoroughly before installing the air-conditioner unit.

INSTALLATIONSHANDBUCH
Zum sicheren und ordnungsgemäßen Gebrauch der Klimageräte das Installationshandbuch gründlich durchlesen.

MANUEL D'INSTALLATION
Veuillez lire le manuel d'installation en entier avant d'installer ce climatiseur pour éviter tout accident et vous assurer d'une utilisation correcte.

INSTALLATIEHANDLEIDING
Voor een veilig en juist gebruik moet u deze installatiehandleiding grondig doorlezen voordat u de airconditioner installeert.

MANUAL DE INSTALACIÓN
Para un uso seguro y correcto, lea detalladamente este manual de instalación antes de montar la unidad de aire acondicionado.

MANUALE DI INSTALLAZIONE
Per un uso sicuro e corretto, leggere attentamente questo manuale di installazione prima di installare il condizionatore d'aria.

ΕΓΧΕΙΡΙΔΙΟ ΟΔΗΓΙΩΝ ΕΓΚΑΤΑΣΤΑΣΗΣ
Για ασφάλεια και σωστή χρήση, παρακαλείστε διαβάσετε προσεχτικά αυτό το εγχειρίδιο εγκατάστασης πριν αρχίσετε την εγκατάσταση της μονάδας κλιματισμού.

MANUAL DE INSTALAÇÃO
Para segurança e utilização correctas, leia atentamente este manual de instalação antes de instalar a unidade de ar condicionado.

INSTALLATIONSMANUAL
Læs venligst denne installationsmanual grundigt, før De installerer airconditionanlægget, af hensyn til sikker og korrekt anvendelse.

INSTALLATIONSHANDBOK
Läs den här installationshandboken noga innan luftkonditioneringsenheten installeras, för säker och korrekt användning.

MONTAJ ELKİTABI
Emniyetli ve doğru biçimde nasıl kullanılacağını öğrenmek için lütfen klima cihazını monte etmeden önce bu elkitabını dikkatle okuyunuz.

РЪКОВОДСТВО ЗА МОНТАЖ
За безопасна и правилна употреба, моля, прочетете внимателно това ръководство преди монтажа на климатизатора.

PODRĘCZNIK INSTALACJI
W celu bezpiecznego i poprawnego korzystania należy przed zainstalowaniem klimatyzatora dokładnie zapoznać się z niniejszym podręcznikiem instalacji.

INSTALLASJONSHÅNDBOK
For sikker og riktig bruk, skal du lese denne installasjonshåndboken nøye før du installerer klimaanlegget.

РУКОВОДСТВО ПО УСТАНОВКЕ
Для осторожного и правильного использования прибора необходимо тщательно ознакомиться с данным руководством по установке до выполнения установки кондиционера.

PŘÍRUČKA K INSTALACI
V zájmu bezpečného a správného používání si před instalací klimatizační jednotky důkladně pročtěte tuto příručku k instalaci.

NÁVOD NA INŠTALÁCIU
Pre bezpečné a správne použitie si pred inštalovaním klimatizačnej jednotky, prosím, starostlivo prečítajte tento návod na inštaláciu.

TELEPÍTÉSI KÉZIKÖNYV
A biztonságos és helyes használathoz, kérjük, olvassa el alaposan ezt a telepítési kézikönyvet, mielőtt telepítené a légkondicionáló egységet.

PRIROČNIK ZA NAMESTITEV
Za varno in pravilno uporabo pred namestitvijo klimatske naprave skrbno preberite priročnik za namestitev.

MANUAL CU INSTRUCŢIUNI DE INSTALARE
Pentru o utilizare corectă şi sigură, vă rugăm să citiţi cu atenţie acest manual înainte de a instala unitatea de aer condiţionat.

PRIRUČNIK ZA UGRADNJU
Radi sigurne i ispravne uporabe, temeljito pročitajte ovaj priručnik prije ugradnje klimatizacijskog uređaja.

安装手册
为了安全和正确地使用本空调器，请在安装前仔细阅读本安装手册。

en de fr nl es it el pt da sv tr bg pl no ru cs sk hu sl ro hr 中国

CONTENTS

1. Safety precautions 2
- 1-1. General precautions 2
- 1-2. Precautions for transporting the unit 3
- 1-3. Precautions for unit installation 4
- 1-4. Precautions for piping work 5
- 1-5. Precautions for electrical wiring 5
- 1-6. Precautions for relocating or repairing the unit 6
- 1-7. Additional precautions 6

2. About the product 9

3. Combination of outdoor units 10

4. Specifications 11

5. Package contents 12

6. Transporting the unit 13

7. Installation location 14
- 7-1. Single unit installation 14
- 7-2. Multiple unit installation 15

8. Foundation work 17

9. Refrigerant piping work 20
- 9-1. Restrictions 20
- 9-2. Pipe selection 23
- 9-3. Twinning kit selection 23
- 9-4. Pipe connection example 24
- 9-5. Piping connections and valve operations 29
- 9-6. Air-tightness test 33
- 9-7. Thermal insulation for pipes 34
- 9-8. Evacuation of the system 36
- 9-9. Additional refrigerant charge 37

10. Electrical work 43
- 10-1. Before electrical work 43
- 10-2. Power cables and device capacity 43
- 10-3. Control cable specifications 45
- 10-4. System configuration 46
- 10-5. Wiring connections in the control box 49
- 10-6. Address setting 54

11. Test run 55
- 11-1. Before a test run 55
- 11-2. Function setting 56
- 11-3. Operation characteristics in relation to the refrigerant charge 57
- 11-4. Operation check 57

12. Inspection and maintenance 58

13. Rating plate information 59

en

1. Safety precautions

- ► **Read and observe the safety precautions below and the instructions provided on the labels affixed to the unit.**
- ► **Retain this manual for future reference. Make sure that this manual is passed on to the end users.**
- ► **All refrigerant piping work, electrical work, air-tightness test, and brazing work must be performed by qualified personnel.**
- ► **Incorrect use may result in serious injury.**

⚠ WARNING	**: indicates a hazardous situation which, if not avoided, could result in death or serious injury.**
⚠ CAUTION	**: indicates a hazardous situation which, if not avoided, could result in minor or moderate injury.**
CAUTION	**: addresses practices not related to personal injury, such as product and/or property damage.**

1-1. General precautions

⚠ WARNING

Do not use any refrigerant other than the type indicated in the manuals for the unit and on the nameplate.

- Doing so will cause the unit or pipes to burst, or result in an explosion or fire during use, during repairs, or at the time of disposal of the unit.
- It may also be in violation of applicable laws.
- MITSUBISHI ELECTRIC CORPORATION cannot be held responsible for malfunctions or accidents resulting from the use of the wrong type of refrigerant.

Do not use the unit in an unusual environment.

- If the unit is used in areas exposed to large amounts of oil, steam, organic solvents, or corrosive gases (such as ammonia, sulfuric compounds, or acids), or areas where acidic/alkaline solutions or special chemical sprays are used frequently, it may significantly reduce the performance and corrode the internal parts, resulting in refrigerant leakage, water leakage, injury, electric shock, malfunction, smoke, or fire.

Do not change the settings of the safety or protection devices.

- Forcing the unit to operate by disabling the safety devices, such as the pressure switch or the thermal switch, may result in bursting, fire, or explosion.
- Operating the unit with a safety device whose settings have been changed may result in bursting, fire, or explosion.
- Using safety devices other than those specified by Mitsubishi Electric may result in bursting, fire, or explosion.

Do not alter or modify the unit.

- Doing so will result in refrigerant leakage, water leakage, serious injury, electric shock, or fire.

Do not wet the electrical parts.

- Doing so may result in current leakage, electric shock, malfunction, or fire.

Do not touch the electrical parts, switches, or buttons with wet fingers.

- Doing so may result in electric shock, malfunction, or fire.

Do not touch the refrigerant pipes and refrigerant line components with bare hands during and immediately after operation.
- The refrigerant in the pipes will be very hot or very cold, resulting in frostbite or burns.

Do not touch the electrical parts with bare hands during and immediately after operation.
- Doing so may result in burns.

Ventilate the room while servicing the unit.
- If the refrigerant leaks, oxygen deficiency may result. If the leaked refrigerant comes in contact with a heat source, toxic gas will be generated.

If you notice any abnormality (e.g., a burning smell), stop the operation, turn off the power switch, and consult your dealer.
- Continuing the operation may result in electric shock, malfunction, or fire.

Properly install all required covers and panels on the terminal box and the control box.
- If dust or water enters the unit, this may result in electric shock or fire.

Periodically check the unit base for damage.
- If the damage is left uncorrected, the unit will fall and cause serious injury.

Consult your dealer for the proper disposal of the unit.
- The refrigerant oil and the refrigerant in the unit will pose a risk of environmental pollution, fire, or explosion.

Do not make any modifications or alterations to the unit. Consult your dealer for repair.
- Improper repair may result in water leakage, electric shock, smoke, or fire.

⚠ CAUTION

Children should be supervised to ensure that they do not play with the appliance.

Do not operate the unit with the panels and guards removed.
- Rotating, hot, or high-voltage parts may cause injury, electric shock, or fire.

Do not touch fans, heat exchanger fins, or the sharp edges of components with bare hands.
- Doing so may result in injury.

Wear protective gloves when working on the unit.
- Failure to do so may result in injury.
- High-pressure pipes poses a risk of burns if touched with bare hands while the unit is in operation.

1-2. Precautions for transporting the unit

⚠ WARNING

When lifting the unit, pass the slings through the four designated sling holes.
- Improper lifting will cause the unit to topple or fall, resulting in serious injury.

⚠ CAUTION

Do not lift the unit with the PP bands that are used on some products.
- Doing so may result in injury.

Observe the restrictions on the maximum weight that a person can lift, which is specified in local regulations.
- Failure to do so may result in injury.

1-3. Precautions for unit installation

⚠ WARNING

Do not install the unit where combustible gas may leak.
- If combustible gas accumulates around the unit, fire or explosion may result.

Do not allow children to play with the packing materials.
- Suffocation or serious injury may result.

Cut up the packing materials before disposal.

All installation work must be performed by qualified personnel in accordance with this manual.
- Improper installation may result in refrigerant leakage, water leakage, serious injury, electric shock, or fire.

If the air conditioner is installed in a small room, take measures to prevent the refrigerant concentration from exceeding the safety limit in the event of refrigerant leakage.
- Consult your dealer regarding the appropriate measures to prevent the allowable concentration from being exceeded. If the refrigerant leaks and the allowable concentration is exceeded, hazards due to a lack of oxygen in the room will result.

Install the unit in accordance with the instructions to minimize the risk of damage from earthquakes and strong winds.
- Improper installation will cause the unit to topple, resulting in serious injury.

The unit must be securely installed on a structure that can sustain its weight.
- Failure to do so will cause the unit to fall, resulting in serious injury. Abnormal vibrations that result from improper installation can generate abnormal sound and damage the pipes, resulting in refrigerant gas leakage.

⚠ CAUTION

Seal all openings around pipes and wires to keep out small animals, rainwater, or snow.
- Failure to do so may result in current leakage, electric shock, or damage to the unit.

Outdoor unit with salt-resistant specification is recommended to use in a place where it is subject to salt air.

Even when the unit with salt-resistant specification is used, it is not completely protected against corrosion.

Salt-resistant unit is resistant to salt corrosion, but not salt-proof.

Install the salt-resistant unit out of direct exposure to sea breeze, and minimize the exposure to salt water mist.

Periodically wash salt deposits off the unit, especially when the unit is installed in a coastal area.

Periodically check the unit, and apply anti-rust agent and replace corroded parts as necessary.

1-4. Precautions for piping work

⚠ WARNING

Before heating the brazed sections, remove the gas and oil that are trapped in the pipes.
- Failure to do so may generate fire, resulting in serious injury.

Do not purge the air using refrigerant. Use a vacuum pump to evacuate the system.
- Residual gas in the refrigerant lines will cause bursting of the pipes or an explosion.

Do not use oxygen, flammable gas, or a refrigerant containing chlorine for air-tightness testing.
- Doing so may result in an explosion. Chlorine will deteriorate the refrigerant oil.

When installing or relocating the unit, do not allow air or any substance other than the specified refrigerant to enter the refrigerant lines.
- Any substance other than the specified refrigerant may cause abnormally high pressure in the refrigerant lines, resulting in bursting of the pipes or an explosion.

After the installation has been completed, check for refrigerant leaks.
- If the refrigerant leaks, oxygen starvation may result. If the leaked refrigerant comes in contact with a heat source, toxic gas will be generated.

1-5. Precautions for electrical wiring

⚠ WARNING

Include some slack in the power cables.
- Failure to do so may break or overheat the cables, resulting in smoke or fire.

Connections must be made securely and without tension on the terminals.
- Improperly connected cables may break, overheat, or cause smoke or fire.

Tighten all terminal screws to the specified torque.
- Loose screws and contact failure may result in smoke or fire.

Electrical work must be performed by qualified personnel in accordance with local regulations and the instructions provided in this manual. Only use the specified cables and dedicated circuits.
- Inadequate power source capacity or improper electrical work will result in electric shock, malfunction, or fire.

Install an earth leakage breaker on the power supply of each unit.
- Failure to do so may result in electric shock or fire.

Only use properly rated breakers (an earth leakage breaker, local switch <a switch + fuse that meets local electrical codes>, or overcurrent breaker).
- Failure to do so may result in electric shock, malfunction, smoke, or fire.

Only use standard power cables of sufficient capacity.
- Failure to do so may result in current leakage, overheating, smoke, or fire.

Proper grounding must be provided by qualified personnel.
- Improper grounding may result in electric shock, fire, explosion, or malfunction due to electrical noise. Do not connect the ground wire to gas or water pipes, lightning rods, or telephone ground wires.

⚠ CAUTION

After the wiring work has been completed, measure the insulation resistance, and make sure that it reads at least 1 MΩ.

- Failure to do so may result in electric leakage, malfunction, or fire.

1-6. Precautions for relocating or repairing the unit

⚠ WARNING

Only qualified personnel must relocate or repair the unit. Do not attempt to disassemble or alter the unit.

- Failure to do so will result in refrigerant leakage, water leakage, serious injury, electric shock, or fire.

Do not service the unit in the rain.

- Doing so may result in electric leakage, electric shock, wire shorting, malfunction, smoke, or fire.

1-7. Additional precautions

CAUTION

To reduce the risk of failures of the compressor or valves, follow the instructions below to prevent abrasive components contained in sandpaper or cutting tools from entering the refrigerant circuit.

- To deburr pipes, use a reamer or other deburring tools, not sandpaper or sanding tools that use abrasive materials.
- To cut pipes, use a pipe cutter, not a grinder or other tools that use abrasive materials.
- When cutting or deburring pipes, do not allow cutting chips or other foreign matters to enter the pipes.
- If cutting chips or other foreign matters entered pipes, wipe inside the pipes to remove them.

Do not turn off the power immediately after stopping operation.

- Wait for at least five minutes after the unit has stopped before turning off the power. Failure to do so may result in drain water leakage or the mechanical failure of sensitive parts.

The unit must be periodically inspected by a dealer or qualified personnel.

- If dust or dirt accumulates inside the unit, the drain pipes may become clogged, and water leakage from the pipes may wet the surroundings and generate odours.

Turn on the power at least 12 hours before starting operation. Keep the power turned on throughout the operating season.

- Insufficient energizing will result in malfunction.

Do not use the air conditioner for special purposes (e.g. keeping food, animals, plants, precision devices, or art objects in a room).

- Such items could be damaged or deteriorated.

Collect the refrigerant and properly dispose of it in accordance with local regulations.

Do not install the unit on or over items that are subject to water damage.

- When the room humidity exceeds 80% or if the drain pipe is clogged, condensation may collect and drip from the indoor unit onto the ceiling or floor.

Drain piping must be installed by a dealer or qualified personnel to ensure proper drainage.

- Improper drain piping may cause water leakage, resulting in damage to furniture and other surroundings.

Take appropriate measures against electrical noise interference when installing the unit in hospitals or radio communication facilities.

- Inverter, high-frequency medical, or wireless communication equipment as well as power generators may cause the air conditioning system to malfunction. The air conditioning system may also adversely affect the operation of these types of equipment by creating electrical noise.

Insulate pipes to prevent condensation.

- Condensation may collect and drip from the unit onto the ceiling or floor.

Keep the service valves closed until refrigerant charging is completed.

- Failure to do so will damage the unit.

Place a wet towel on the service valves before brazing the pipes to keep the temperature of the valves from rising above 120ºC (248ºF).

- Failure to do so may result in equipment damage.

Keep the flame out of contact with the cables and metal sheet when brazing the pipes.

- Failure to do so may result in burnout or malfunction.

Use the following tools specifically designed for use with the specified refrigerant: Gauge manifold, charge hose, gas leak detector, check valve, refrigerant charge base, vacuum gauge, and refrigerant recovery equipment.

- Gas leak detectors for conventional refrigerants will not react to a refrigerant that does not contain chlorine.
- If the specified refrigerant is mixed with water, refrigerant oil, or another refrigerant, the refrigerant oil will deteriorate and the compressor will malfunction.

Use a vacuum pump with a check valve.

- If the vacuum pump oil flows back into the refrigerant lines, the refrigerant oil may deteriorate and the compressor may malfunction.

Keep tools clean.

- If dust, dirt, or water accumulates on the charging hose or the flare processing tool, the refrigerant will deteriorate and the compressor will malfunction.

Use refrigerant piping made of phosphorus deoxidized copper (copper and copper alloy seamless pipes) that meets local requirements. Pipe joints should also meet local requirements. Keep the inner and outer surfaces of the pipes clean and free of sulphur, oxides, dust/dirt, shaving particles, oils, moisture, or any other contaminants.

- Contaminants on the inside of the refrigerant piping will cause the refrigerant oil to deteriorate and cause the compressor to malfunction.

Store pipes indoors, and keep both ends of the pipes sealed until just before making a flare connection or brazing. (Store elbows and other joints in plastic bags.)

- If dust, dirt, or water enters the refrigerant lines, the refrigerant oil will deteriorate and the compressor will malfunction.

Braze the pipes with a nitrogen purge to avoid oxidation.

- Oxidized flux inside the refrigerant pipes will cause the refrigerant oil to deteriorate and cause the compressor to malfunction.

Do not use existing refrigerant piping.

- The old refrigerant and refrigerant oil in the existing piping contain a large amount of chlorine, which will cause the refrigerant oil in the new unit to deteriorate and cause the compressor to malfunction.

Charge refrigerant in a liquid state.

- Charging refrigerant in the gaseous state will change the composition of the refrigerant and lead to a performance drop.

Do not use a charging cylinder when charging refrigerant.

- The use of a charging cylinder may change the composition of the refrigerant and lead to a performance drop.

If a large electric current flows due to a malfunction or faulty wiring, earth leakage breakers on the unit side and on the upstream side of the power supply system could both operate. Depending on the importance of the system, separate the power supply system or take protective coordination of breakers.

This appliance is intended to be used by expert or trained users in shops, in light industry and on farms, or for commercial use by lay persons.

This appliance is not intended for use by persons (including children) with reduced physical, sensory or mental capabilities, or lack of experience and knowledge, unless they have been given supervision or instruction concerning use of the appliance by a person responsible for their safety.

Only qualified personnel may touch the USB port in the control box.

2. About the product

- The outdoor unit described in this manual is air-conditioning equipment that is designed only for human comfort.
- The numeric values in the unit model name (e.g., (E)P***YNW) indicate the capacity index of the unit.
- This unit uses R410A refrigerant.
- In this manual, the following terms are used, depending on the systems as shown in the table below.

	R2 system	Hybrid City Multi system
Controllers that are connected to indoor units	BC controller	HBC controller
Heating medium on the indoor unit side	Refrigerant	Water or antifreeze liquid

- CMB-WP108V-G can be connected to PURY-WP200YJM-A and PURY-WP250YJM-A, but not to PURY-(E)P-YNW-A2/TR2 models of units.
- PURY-(E)P200YNW-A2/TR2 through PURY-(E)P500YNW-A2/TR2 can be used in a Hybrid City Multi system.

3. Combination of outdoor units

(1) P models

Outdoor unit model	Combination of outdoor units	
PURY-P200YNW-A2/TR2(-BS)	-	-
PURY-P250YNW-A2/TR2(-BS)	-	-
PURY-P300YNW-A2/TR2(-BS)	-	-
PURY-P350YNW-A2/TR2(-BS)	-	-
PURY-P400YNW-A2/TR2(-BS)	-	-
PURY-P400YSNW-A2/TR2(-BS)	PURY-P200YNW-A2/TR2(-BS)	PURY-P200YNW-A2/TR2(-BS)
PURY-P450YNW-A2/TR2(-BS)	-	-
PURY-P450YSNW-A2/TR2(-BS)	PURY-P200YNW-A2/TR2(-BS)	PURY-P250YNW-A2/TR2(-BS)
PURY-P500YNW-A2/TR2(-BS)	-	-
PURY-P500YSNW-A2/TR2(-BS)	PURY-P250YNW-A2/TR2(-BS)	PURY-P250YNW-A2/TR2(-BS)
PURY-P550YNW-A2/TR2(-BS) *2	-	-
PURY-P550YSNW-A2/TR2(-BS)	PURY-P250YNW-A2/TR2(-BS)	PURY-P300YNW-A2/TR2(-BS)
PURY-P600YSNW-A2/TR2(-BS)	PURY-P300YNW-A2/TR2(-BS)	PURY-P300YNW-A2/TR2(-BS)
PURY-P650YSNW-A2/TR2(-BS)	PURY-P300YNW-A2/TR2(-BS)	PURY-P350YNW-A2/TR2(-BS)
PURY-P700YSNW-A2/TR2(-BS)	PURY-P350YNW-A2/TR2(-BS)	PURY-P350YNW-A2/TR2(-BS)
PURY-P750YSNW-A2/TR2(-BS)	PURY-P350YNW-A2/TR2(-BS)	PURY-P400YNW-A2/TR2(-BS)
PURY-P800YSNW-A2/TR2(-BS)	PURY-P400YNW-A2/TR2(-BS)	PURY-P400YNW-A2/TR2(-BS)
PURY-P850YSNW-A2/TR2(-BS)	PURY-P400YNW-A2/TR2(-BS)	PURY-P450YNW-A2/TR2(-BS)
PURY-P900YSNW-A2/TR2(-BS)	PURY-P450YNW-A2/TR2(-BS)	PURY-P450YNW-A2/TR2(-BS)
PURY-P950YSNW-A2/TR2(-BS)	PURY-P450YNW-A2/TR2(-BS)	PURY-P500YNW-A2/TR2(-BS)
PURY-P1000YSNW-A2/TR2(-BS)	PURY-P500YNW-A2/TR2(-BS)	PURY-P500YNW-A2/TR2(-BS)
PURY-P1050YSNW-A2/TR2(-BS)	PURY-P500YNW-A2/TR2(-BS)	PURY-P550YNW-A2/TR2(-BS)
PURY-P1100YSNW-A2/TR2(-BS)	PURY-P550YNW-A2/TR2(-BS)	PURY-P550YNW-A2/TR2(-BS)

*1 "Twinning Kit" is required to connect combination units on site.
*2 P550 units are listed as combination models in the manuals of models manufactured for Australia.
*3 PURY-P-YNW-A2/TR2 can only be combined with PURY-P-YNW-A2/TR2.

(2) EP models

Outdoor unit model	Combination of outdoor units	
PURY-EP200YNW-A2/TR2(-BS)	-	-
PURY-EP250YNW-A2/TR2(-BS)	-	-
PURY-EP300YNW-A2/TR2(-BS)	-	-
PURY-EP350YNW-A2/TR2(-BS)	-	-
PURY-EP400YNW-A2/TR2(-BS)	-	-
PURY-EP400YSNW-A2/TR2(-BS)	PURY-EP200YNW-A2/TR2(-BS)	PURY-EP200YNW-A2/TR2(-BS)
PURY-EP450YNW-A2/TR2(-BS)	-	-
PURY-EP450YSNW-A2/TR2(-BS)	PURY-EP200YNW-A2/TR2(-BS)	PURY-EP250YNW-A2/TR2(-BS)
PURY-EP500YNW-A2/TR2(-BS)	-	-
PURY-EP500YSNW-A2/TR2(-BS)	PURY-EP250YNW-A2/TR2(-BS)	PURY-EP250YNW-A2/TR2(-BS)
PURY-EP550YNW-A2/TR2(-BS) *2	-	-
PURY-EP550YSNW-A2/TR2(-BS)	PURY-EP250YNW-A2/TR2(-BS)	PURY-EP300YNW-A2/TR2(-BS)
PURY-EP600YSNW-A2/TR2(-BS)	PURY-EP300YNW-A2/TR2(-BS)	PURY-EP300YNW-A2/TR2(-BS)
PURY-EP650YSNW-A2/TR2(-BS)	PURY-EP300YNW-A2/TR2(-BS)	PURY-EP350YNW-A2/TR2(-BS)
PURY-EP700YSNW-A2/TR2(-BS)	PURY-EP350YNW-A2/TR2(-BS)	PURY-EP350YNW-A2/TR2(-BS)
PURY-EP750YSNW-A2/TR2(-BS)	PURY-EP350YNW-A2/TR2(-BS)	PURY-EP400YNW-A2/TR2(-BS)
PURY-EP800YSNW-A2/TR2(-BS)	PURY-EP400YNW-A2/TR2(-BS)	PURY-EP400YNW-A2/TR2(-BS)
PURY-EP850YSNW-A2/TR2(-BS)	PURY-EP400YNW-A2/TR2(-BS)	PURY-EP450YNW-A2/TR2(-BS)
PURY-EP900YSNW-A2/TR2(-BS)	PURY-EP450YNW-A2/TR2(-BS)	PURY-EP450YNW-A2/TR2(-BS)
PURY-EP950YSNW-A2/TR2(-BS)	PURY-EP450YNW-A2/TR2(-BS)	PURY-EP500YNW-A2/TR2(-BS)
PURY-EP1000YSNW-A2/TR2(-BS)	PURY-EP500YNW-A2/TR2(-BS)	PURY-EP500YNW-A2/TR2(-BS)
PURY-EP1050YSNW-A2/TR2(-BS)	PURY-EP500YNW-A2/TR2(-BS)	PURY-EP550YNW-A2/TR2(-BS)
PURY-EP1100YSNW-A2/TR2(-BS)	PURY-EP550YNW-A2/TR2(-BS)	PURY-EP550YNW-A2/TR2(-BS)

*1 "Twinning Kit" is required to connect combination units on site.
*2 EP550 units are listed as combination models in the manuals of models manufactured for Australia.
*3 PURY-EP-YNW-A2/TR2 can only be combined with PURY-EP-YNW-A2/TR2.

4. Specifications

External static pressure			0 Pa*2
Indoor unit	Total capacity		50% to 150%*1
	Model		P10 to P250, M20 to M140
Temperature range (Cooling)	Indoor	W.B.	15.0°C to 24.0°C (59°F to 75°F)
	Outdoor	D.B.	-5.0°C to 52.0°C (23°F to 126°F)
Temperature range (Heating)	Indoor	D.B.	15.0°C to 27.0°C (59°F to 81°F)
	Outdoor	W.B.	-20.0°C to 15.5°C (-4°F to 60°F)

(1) P models

Model		P200YNW*3	P250YNW*3	P300YNW*3	P350YNW*3	P400YNW*3
Sound pressure level*4 *5 (50/60 Hz)		59 dB <A>	60.5 dB <A>	61 dB <A>	62.5 dB <A>	65 dB <A>
Indoor unit	Quantity	1 to 20	1 to 25	1 to 30	1 to 35	1 to 40

Model		P450YNW*3	P500YNW*3	P550YNW	P400YSNW	P450YSNW
Sound pressure level*4 *5 (50/60 Hz)		65.5 dB <A>	63.5 dB <A>	70 dB <A>	62 dB <A>	63 dB <A>
Indoor unit	Quantity	1 to 45	1 to 50	2 to 50	1 to 40	1 to 45

Model		P500YSNW	P550YSNW	P600YSNW	P650YSNW	P700YSNW
Sound pressure level*4 *5 (50/60 Hz)		63.5 dB <A>	64 dB <A>	64 dB <A>	65 dB <A>	65.5 dB <A>
Indoor unit	Quantity	1 to 50	2 to 50	2 to 50	2 to 50	2 to 50

Model		P750YSNW	P800YSNW	P850YSNW	P900YSNW	P950YSNW
Sound pressure level*4 *5 (50/60 Hz)		67 dB <A>	68 dB <A>	68.5 dB <A>	68.5 dB <A>	68 dB <A>
Indoor unit	Quantity	2 to 50	2 to 50	2 to 50	2 to 50	2 to 50

Model		P1000YSNW	P1050YSNW	P1100YSNW
Sound pressure level*4 *5 (50/60 Hz)		66.5 dB <A>	71 dB <A>	73 dB <A>
Indoor unit	Quantity	2 to 50	3 to 50	3 to 50

(2) EP models

Model		EP200YNW*3	EP250YNW*3	EP300YNW*3	EP350YNW*3	EP400YNW*3
Sound pressure level*4 *5 (50/60 Hz)		59 dB <A>	60.5 dB <A>	61 dB <A>	62.5 dB <A>	65 dB <A>
Indoor unit	Quantity	1 to 20	1 to 25	1 to 30	1 to 35	1 to 40

Model		EP450YNW*3	EP500YNW*3	EP550YNW	EP400YSNW	EP450YSNW
Sound pressure level*4 *5 (50/60 Hz)		65.5 dB <A>	63.5 dB <A>	70 dB <A>	62 dB <A>	63 dB <A>
Indoor unit	Quantity	1 to 45	1 to 50	2 to 50	1 to 40	1 to 45

Model		EP500YSNW	EP550YSNW	EP600YSNW	EP650YSNW	EP700YSNW
Sound pressure level*4 *5 (50/60 Hz)		63.5 dB <A>	64 dB <A>	64 dB <A>	65 dB <A>	65.5 dB <A>
Indoor unit	Quantity	1 to 50	2 to 50	2 to 50	2 to 50	2 to 50

Model		EP750YSNW	EP800YSNW	EP850YSNW	EP900YSNW	EP950YSNW
Sound pressure level*4 *5 (50/60 Hz)		67 dB <A>	68 dB <A>	68.5 dB <A>	68.5 dB <A>	68 dB <A>
Indoor unit	Quantity	2 to 50	2 to 50	2 to 50	2 to 50	2 to 50

Model		EP1000YSNW	EP1050YSNW	EP1100YSNW
Sound pressure level*4 *5 (50/60 Hz)		66.5 dB <A>	71 dB <A>	73 dB <A>
Indoor unit	Quantity	2 to 50	3 to 50	3 to 50

*1 The maximum total capacity of indoor units operating simultaneously is 150%.
*2 To enable the high static pressure setting, set the dipswitch on the main board as follows.

	SW6-5: ON	SW6-5: OFF
SW6-4: ON	80 Pa*	60 Pa*
SW6-4: OFF	30 Pa	0 Pa

* (E)P550YNW, (E)P1050, (E)P1100YSNW: invalid
*3 These models can be used for a Hybrid City Multi system.
*4 Cooling mode
*5 The sound pressure level is measured by the conventional method in JIS for reference purpose.

en

5. Package contents

The table below lists all the parts and their quantities included in the package.

Tie band	2

6. Transporting the unit

WARNING

When lifting the unit, pass the slings through the four designated sling holes.
- Improper lifting will cause the unit to topple or fall, resulting in serious injury.

- Always use two slings to lift up the unit. Each sling must be at least 8 m (26 ft) long and must be able to support the weight of the unit.
- Put protective pads between slings and the unit where the slings touch the unit at the base to protect the unit from being scratched.
- Put 50 mm (2 in) or thicker protective pads between slings and the unit where the slings touch the unit at the top of the unit to protect the unit from being scratched and to avoid contact with the slings and the fan guard.
- Make sure that the angles between slings at the top are less than 40 degrees.

P200, P250, P300, EP200, EP250, EP300

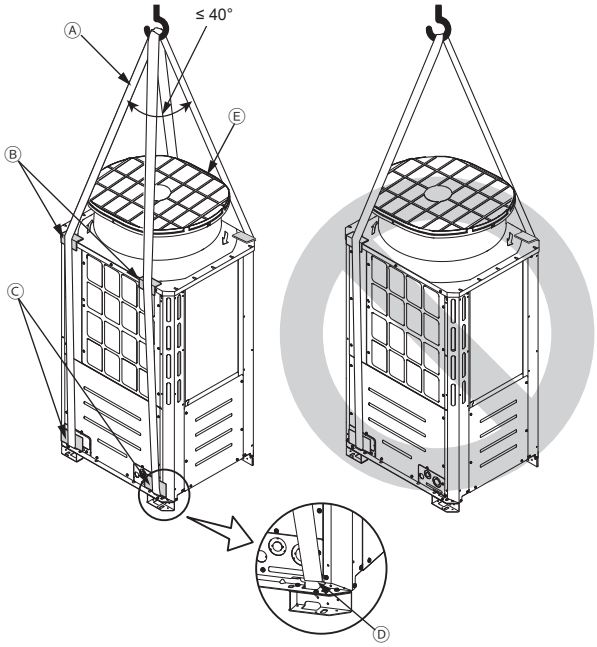

P350, P400, P450, EP350, EP400, EP450

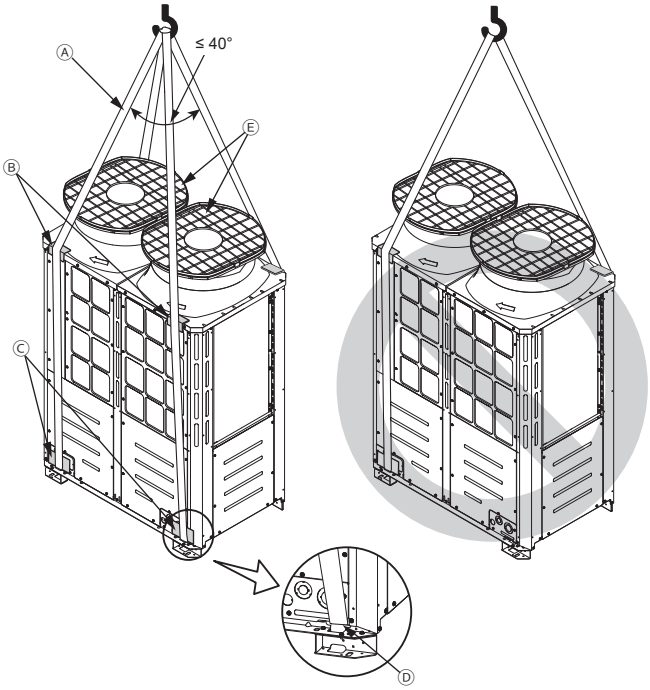

P500, P550, EP500, EP550

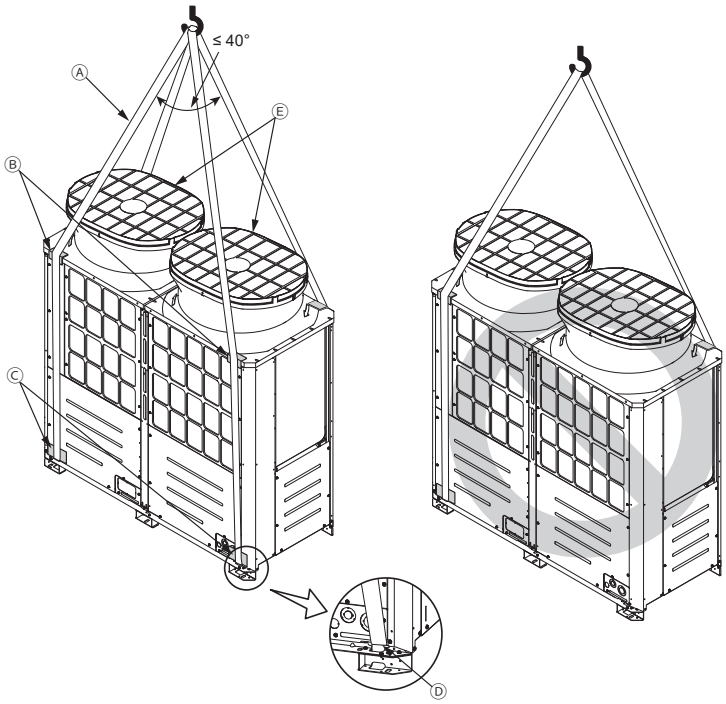

Ⓐ Slings (Min. 8 m (26 ft) x 2)
Ⓑ Protective pads (Minimum thickness: 50 mm (2 in))
(two each in the front and back)
Ⓒ Protective pads
(two each in the front and back)
Ⓓ Sling holes
(two each in the front and back)
Ⓔ Fan guard

7. Installation location

WARNING

Do not install the unit where combustible gas may leak.

- If combustible gas accumulates around the unit, fire or explosion may result.

- Provide sufficient space around the unit for effective operation, efficient air movement, and ease of access for maintenance.
- Note that refrigerant gas is heavier than air and will therefore tend to collect in low spots such as basements.
- When an indoor unit that draws in outside air exits near the outdoor unit, be careful not to affect the normal operation of the indoor unit.
- When the amount of drain water is excessive, drain water comes out of the outdoor unit along the panel during heating operation. Provide sufficient space around the unit according to the instructions below.
- Installing the outdoor unit in an indoor space with small air intake windows may result in insufficient air flow. Install the unit where sufficient air flow is available. When installing the unit outdoors, also ensure that sufficient air flow is maintained.

7-1. Single unit installation

(1) When all walls are within their height limits*.

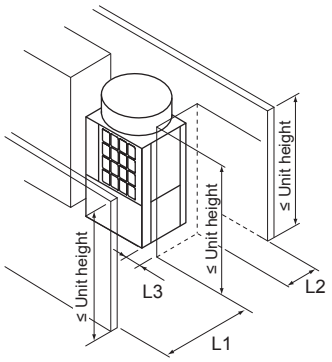

[mm (in)]

* Height limit

Front/Right/Left/Rear	Same height or lower than the overall height of the unit

	Required minimum distance [mm (in)]		
	L1 (Front)	L2 (Rear)	L3 (Right/Left)
When the distance behind the unit (L2) needs to be small	450 (17-3/4)	100 (3-15/16)	50 (2)
When the distance to the right or left (L3) needs to be small	450 (17-3/4)	300 (11-13/16)	15 (5/8)

(2) When one or more walls exceed their height limits*.

When the wall(s) at the front and/ or the right/left exceed(s) their height limits

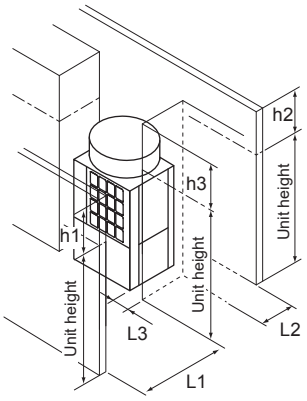

When the wall at the rear exceeds its height limit

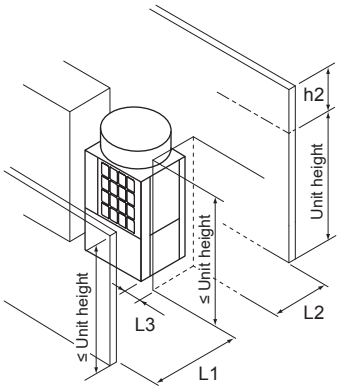

When all walls exceed their height limits

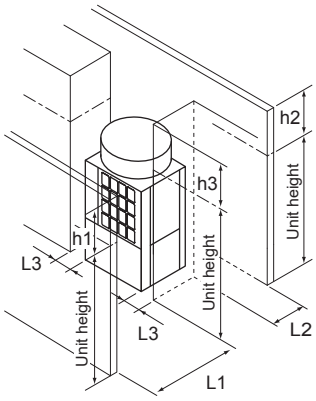

Add the dimension that exceeds the height limit (shown as "h1" through "h3" in the figures) to L1, L2, and L3 as shown in the table below.

	Required minimum distance [mm (in)]		
	L1 (Front)	L2 (Rear)	L3 (Right/Left)
When the distance behind the unit (L2) needs to be small	450 (17-3/4) + h1	100 (3-15/16) + h2	50 (2) + h3
When the distance to the right or left (L3) needs to be small	450 (17-3/4) + h1	300 (11-13/16) + h2	15 (5/8) + h3

(3) When there are overhead obstacles

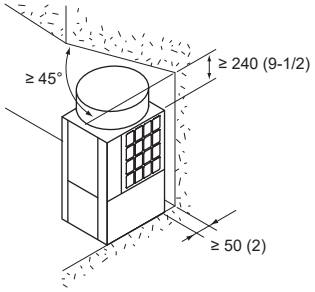

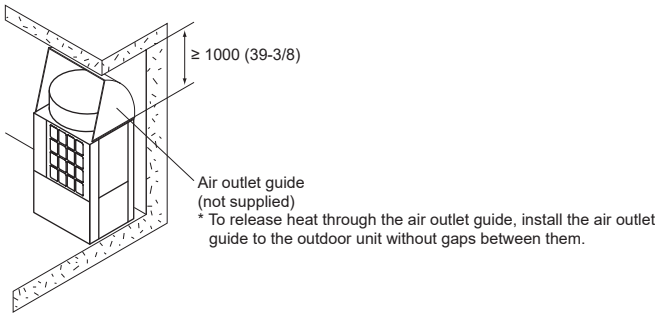

7-2. Multiple unit installation

- When installing multiple units, make sure to take into consideration factors such as providing enough space for people to pass through, ample space between blocks of units, and sufficient space for airflow. (The areas marked with Ⓐ in the figures below must be left open.)
- In the same way as with the single unit installation, add the dimension that exceeds the height limit (shown as "h1" through "h3" in the figures) to L1, L2, and L3 as shown in the tables below.
- If there are walls in the front and rear of the block of units, up to six units (three units for units P500, P550, EP500, and EP550) can be installed consecutively side by side, and a space of 1000 mm (39-3/8 in) or more must be left between each block of six units (three units for units P500, P550, EP500, and EP550).
- When the amount of drain water is excessive, drain water comes out of the outdoor unit along the panel during heating operation.

(1) Side-by-side installation

When the distances between the units (L4) need to be small

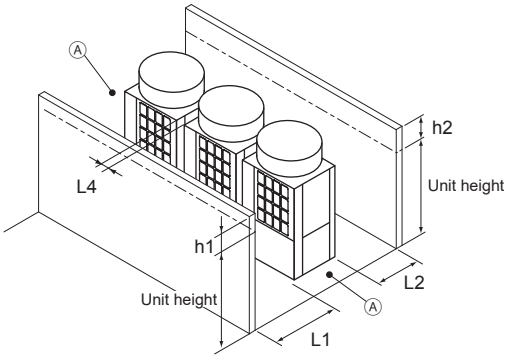

Required minimum distance [mm (in)]		
L1 (Front)	L2 (Rear)	L4 (Between)
450 (17-3/4) + h1	300 (11-13/16) + h2	30 (1-3/16)

When the distance behind the block of units (L2) needs to be small

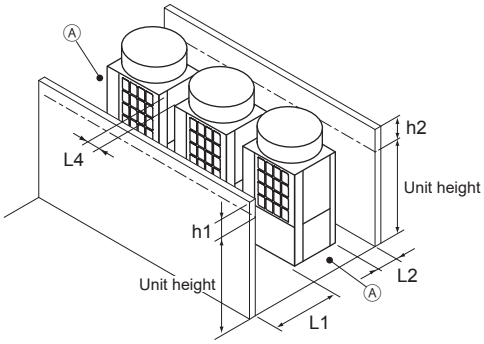

Required minimum distance [mm (in)]		
L1 (Front)	L2 (Rear)	L4 (Between)
450 (17-3/4) + h1	100 (3-15/16) + h2	100 (3-15/16)

(2) Face-to-face installation

When there are walls in the front and rear of the block of units

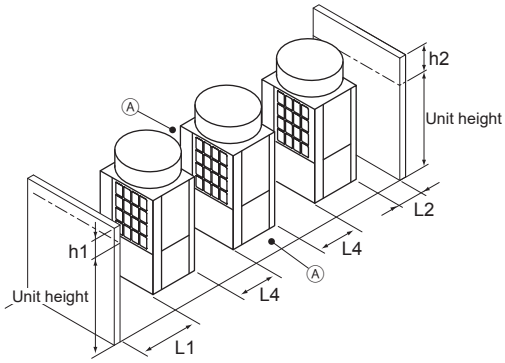

Required minimum distance [mm (in)]		
L1 (Front)	L2 (Rear)	L4 (Between)
450 (17-3/4) + h1	100 (3-15/16) + h2	450 (17-3/4)

When there is a wall on either the right or left side of the block of units

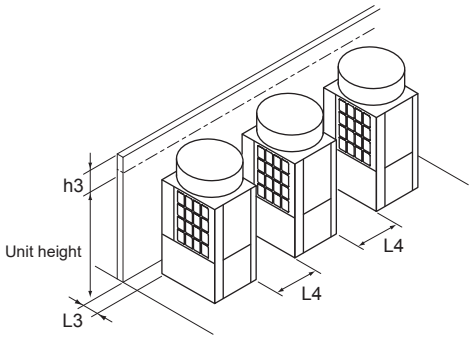

Required minimum distance [mm (in)]	
L3 (Right/Left)	L4 (Between)
15 (5/8) + h3	450 (17-3/4)

(3) Combination of face-to-face and side-by-side installations

When there are walls in the front and rear of the block of units

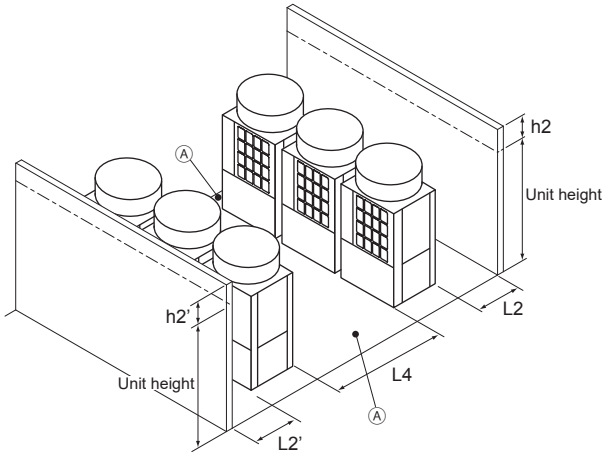

Required minimum distance [mm (in)]		
L2 (Rear)	L2' (Rear)	L4 (Between)
300 (11-13/16) + h2	300 (11-13/16) + h2'	900 (35-7/16)

When there are two walls in an L-shape

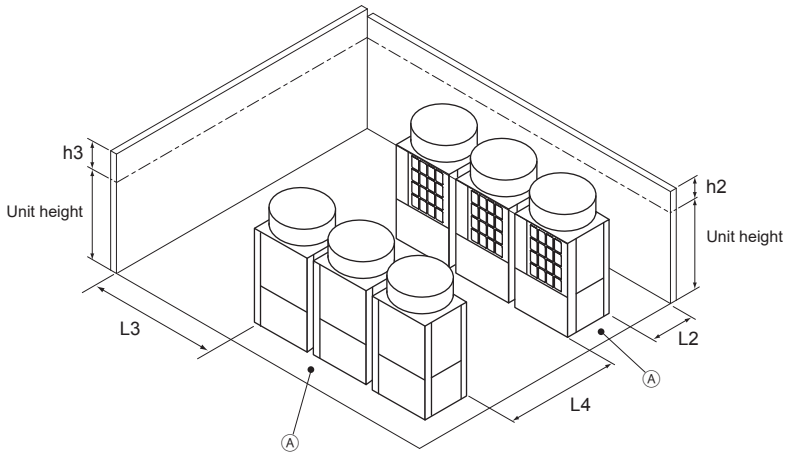

Required minimum distance [mm (in)]		
L2 (Rear)	L3 (Right/Left)	L4 (Between)
300 (11-13/16) + h2	1000 (39-3/8) + h3	900 (35-7/16)

Ⓐ Leave open in two directions.

8. Foundation work

WARNING

Install the unit in accordance with the instructions to minimize the risk of damage from earthquakes and strong winds.

- Improper installation will cause the unit to topple, resulting in serious injury.

> **To reduce the vibration of the unit operation, irrespective of the cause of the vibration such as earthquakes and strong winds, perform the foundation work in accordance with the installation instructions (including the instructions for installing anti-vibration rubber pads) provided in this section.**

en

The unit must be securely installed on a structure that can sustain its weight.

- Failure to do so will cause the unit to fall, resulting in serious injury. Abnormal vibrations that result from improper installation can generate abnormal sound and damage the pipes, resulting in refrigerant gas leakage.

> **Take adequate measures against natural disasters including earthquakes and windstorms so that the unit will not fall or tip over. Consult your local specialist for safety measures to be taken.**

- When performing the foundation work, make sure that the floor surface has sufficient strength and carefully route pipes and wires in consideration of the water drainage that will be required when the unit is operated.
- If considering routing the pipes and wires across the bottom of the unit, make sure that the base is at least 100 mm (3-15/16 in) high so that the through-holes will not be blocked.
- Provide a strong base of concrete or angle iron. If a stainless steel base is used, insulate the area between the base and the outdoor unit by putting a rubber cushion or by applying an electrically insulated coating to prevent the base from rusting.
- Install the unit on a level surface.
- With some types of installation, unit vibration and sound will be transmitted to the floors and walls. Excessive vibrations can damage the pipes, resulting in refrigerant gas leakage. Take measures to prevent vibration (such as using anti-vibration rubber pads).
- Securely bolt down the unit as illustrated below so that it will not fall over when subject to wind gusts or earthquakes.

[mm (in)]

(1) Without a detachable leg

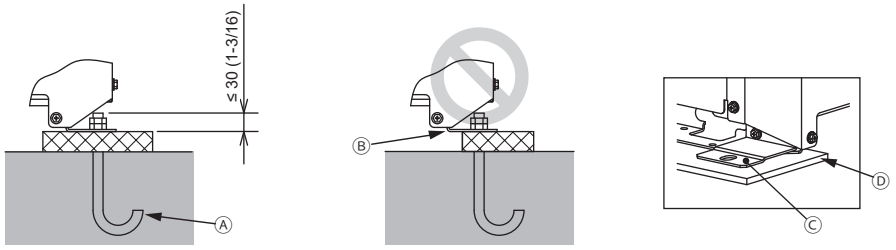

(2) With a detachable leg

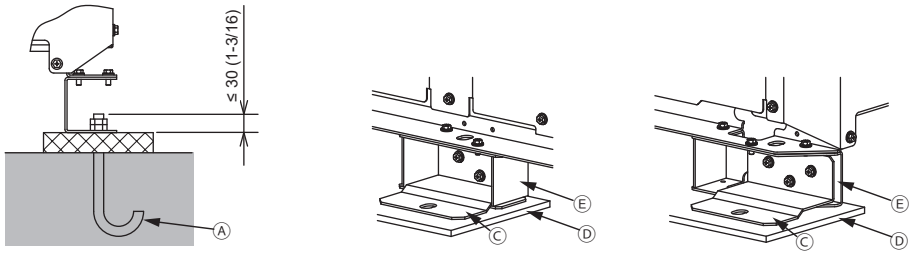

Ⓐ M10 anchor bolt (not supplied)
* Required specification for M10 anchor bolt: Tensile load of 5.6 kN or more to withstand the short-term load caused by earthquakes or strong winds

Ⓑ (Incorrect installation) The corner section is not securely received.

Ⓒ Fixing bracket for M12 hole-in anchor bolt (not supplied) (to be fixed with three M5 self-tapping screws)
* Required specification for M12 hole-in anchor bolt: Tensile load of 6.7 kN or more to withstand the short-term load caused by earthquakes or strong winds
Use the fixing bracket with sufficient strength.

Ⓓ Anti-vibration rubber pad
(The pad needs to be large enough to cover the entire width of each unit leg.)

Ⓔ Detachable leg

- Make sure that the corner section is securely received. If not, the unit legs could bend.
- The detachable legs must be properly supported by both the anti-vibration rubber pads and the base so that the unit legs will not be deformed or the refrigerant gas will not leak from the unit pipes. When the detachable legs are not used, all the bottom corners of the unit must still be supported by both the anti-vibration rubber pads and the base. Abnormal vibrations that result from improper installation can generate abnormal sound and damage the pipes, resulting in refrigerant gas leakage.
- The length of the projecting part of the anchor bolt should be 30 mm (1-3/16 in) or less.
- This unit is not designed to be anchored with post-installed anchor bolts unless fixing brackets are installed at the bottom four locations (six locations for units P500, P550, EP500, and EP550).
- To remove the detachable legs on site, unscrew the screws shown in the figure below. If the unit leg coating is damaged when the detachable leg is removed, repair the coating on site.

Ⓐ Screws

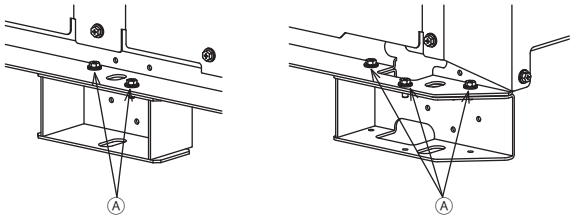

- In abnormally harsh environments such as cold and/or windy areas, sufficient countermeasures to guard against excessive wind and snow should be taken to ensure the unit's correct operation. When the unit is expected to operate in cooling mode in conditions under 10°C (50°F), in snowy areas, in environments subject to strong winds or rain, install snow hoods of the following specifications (not supplied) as shown in the figure below.

Material: Galvanized steel plate 1.2T
Painting: Overall painting with polyester powder
Color: Munsell 5Y8/1 (same as the unit color)

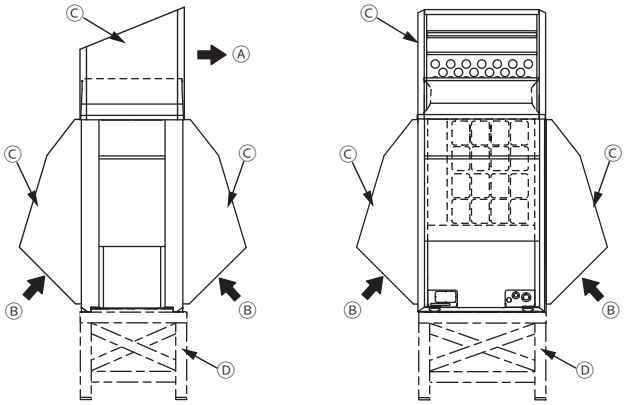

Ⓐ Outlet
Ⓑ Inlet
Ⓒ Snow hood
Ⓓ Raised base

- Install the unit so that the wind will not blow directly against the inlet and outlet.
- If necessary, install the unit on a raised base of the following specifications (not supplied) to prevent damage from snow.

Material: Angle iron (Build a structure that snow and wind can pass through.)
Height: Expected maximum snowfall plus 200 mm (7-7/8 in)
Width: Within the unit width (If the raised base is too wide, snow will accumulate on the raised base.)

- When the unit is used in a cold region and the heating operation is continuously performed for a long time when the outside air temperature is below freezing, install a heater on the raised base or take other appropriate measures to prevent water from freezing on the raised base.
- When installing a panel heater, provide sufficient space for maintenance accordingly. For details, refer to the installation manual for the panel heater.
- When installing a snow hood, take pressure loss into consideration to prevent airflow from decreasing.

9. Refrigerant piping work

⚠ WARNING

Do not use any refrigerant other than the type indicated in the manuals for the unit and on the nameplate.

- Doing so will cause the unit or pipes to burst, or result in an explosion or fire during use, during repairs, or at the time of disposal of the unit.
- It may also be in violation of applicable laws.
- MITSUBISHI ELECTRIC CORPORATION cannot be held responsible for malfunctions or accidents resulting from the use of the wrong type of refrigerant.

After the installation has been completed, check for refrigerant leaks.

- If the refrigerant leaks, oxygen starvation may result. If the leaked refrigerant comes in contact with a heat source, toxic gas will be generated.

⚠ CAUTION

Wear protective gloves when working on the unit.

- Failure to do so may result in injury.
- High-pressure pipes poses a risk of burns if touched with bare hands while the unit is in operation.

CAUTION

To reduce the risk of failures of the compressor or valves, follow the instructions below to prevent abrasive components contained in sandpaper or cutting tools from entering the refrigerant circuit.

- To deburr pipes, use a reamer or other deburring tools, not sandpaper or sanding tools that use abrasive materials.
- To cut pipes, use a pipe cutter, not a grinder or other tools that use abrasive materials.
- When cutting or deburring pipes, do not allow cutting chips or other foreign matters to enter the pipes.
- If cutting chips or other foreign matters entered pipes, wipe inside the pipes to remove them.

Use the following tools specifically designed for use with the specified refrigerant: Gauge manifold, charge hose, gas leak detector, check valve, refrigerant charge base, vacuum gauge, and refrigerant recovery equipment.

- Gas leak detectors for conventional refrigerants will not react to a refrigerant that does not contain chlorine.
- If the specified refrigerant is mixed with water, refrigerant oil, or another refrigerant, the refrigerant oil will deteriorate and the compressor will malfunction.

Do not use existing refrigerant piping.

- The old refrigerant and refrigerant oil in the existing piping contain a large amount of chlorine, which will cause the refrigerant oil in the new unit to deteriorate and cause the compressor to malfunction.

9-1. Restrictions

- Existing refrigerant piping must not be used because the design pressure for systems using R410A is higher than that for systems using other types of refrigerants.
- Do not install outdoor unit piping when it is raining.
- Do not use special detergents for washing piping.
- Always observe the restrictions on refrigerant piping (such as pipe size, pipe length, and vertical separation distance) to prevent equipment failure or a decline in heating/cooling performance.
- Do not install solenoid valves to prevent oil backflow and compressor start-up failure.

- Do not install a sight glass because it may show improper refrigerant flow. If a sight glass is installed, inexperienced technicians that use the glass may overcharge the refrigerant.
- Support the on-site pipes near the outdoor unit at 0.5-meter intervals or less, and at 2-meter intervals or less in other areas. Support the pipes so that the bending part is securely fixed in place.
- Refrigerant pipes may expand or shrink due to temperature fluctuations of the refrigerant inside the pipes. When installing long straight pipes, provide traps to absorb the thermal expansion of the pipes.
- The pipe from multiple outdoor units must be installed so that oil will not accumulate in the pipe under certain conditions. Refer to the figures below for details.

  * Small dots in the figures indicate branching points.

  Ⓐ To a BC controller

(1) The pipe from the outdoor units must be inclined downward to the indoor unit side. In the figure on the right, because the pipe is inclined upward, the oil in the pipe accumulates when Unit 1 is in operation and Unit 2 is stopped.

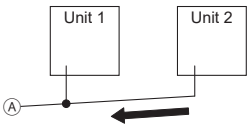

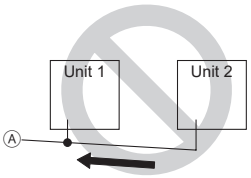

(2) The distance between the unit bottom and the pipe (H) must be 0.2 m (7-7/8 in) or below. In the figure on the right, because the distance is more than 0.2 m (7-7/8 in), the oil accumulates in Unit 1 when Unit 2 is in operation and Unit 1 is stopped.

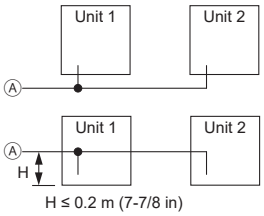

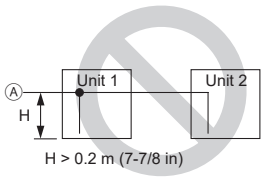

(3) The vertical separation between units (H) must be 0.1 m (3-15/16 in) or below. In the figure on the right, because the distance is more than 0.1 m (3-15/16 in), the oil accumulates in Unit 1 when Unit 2 is in operation and Unit 1 is stopped.

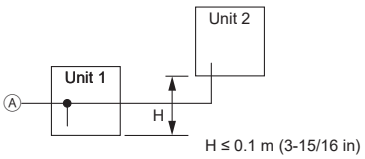

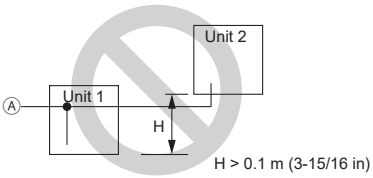

(4) The vertical separation between units (H) must be 0.1 m (3-15/16 in) or below. In the figure on the right, because the distance is more than 0.1 m (3-15/16 in), the oil accumulates in Unit 2 when Unit 1 is in operation and Unit 2 is stopped.

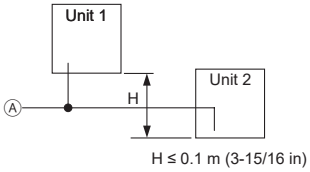

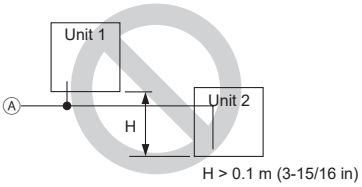

- The Twinning Kit must be installed horizontally using a level vessel to avoid unit damage.

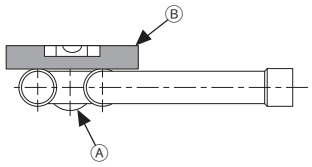

Ⓐ Twinning Kit
Ⓑ Level vessel

- Restriction on installing the low-pressure pipe joint between outdoor units and sub BC (for P-J type, P-JA type, P-KA type, and P-KB type)

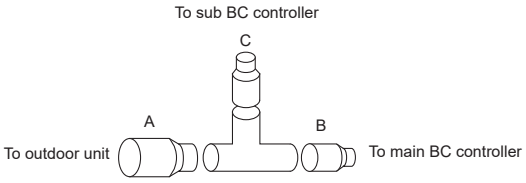

  - Regarding the low-pressure pipe joint between outdoor units and sub BC, A and B must be installed horizontally, and C must be installed upward higher than the horizontal plane of A and B.
- Restriction on installing the 2-Branch Joint Pipe between main BC and sub BC on the high-pressure piping, low-pressure piping, and liquid piping.

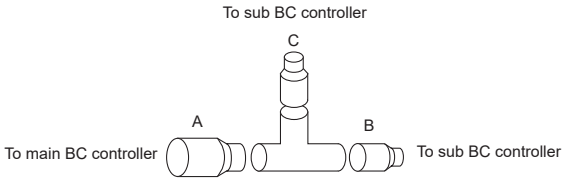

  - Regarding the 2-Branch Joint Pipe between main BC and sub BC on the high-pressure/low-pressure/liquid piping, A and B must be installed horizontally, and C must be installed upward higher than the horizontal plane of A and B.
- If the length of the pipe between the branching point and the outdoor unit exceeds 2 m (6 ft), provide a trap within 2 m (6 ft) from the branching point.
  The trap must be at least 200 mm (7-7/8 in) in height. (high-pressure pipe only) If there is no trap, oil can accumulate inside the pipe, causing a shortage of oil and may damage the compressor.
  * Small dots in the figures indicate branching points.

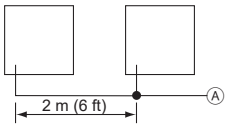

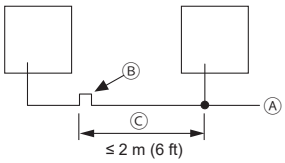

Ⓐ To a BC controller
Ⓑ Trap (high-pressure pipe only)
Ⓒ High-pressure pipe

9-2. Pipe selection

CAUTION

Use refrigerant piping made of phosphorus deoxidized copper (copper and copper alloy seamless pipes) that meets local requirements. Pipe joints should also meet local requirements. Keep the inner and outer surfaces of the pipes clean and free of sulphur, oxides, dust/dirt, shaving particles, oils, moisture, or any other contaminants.

- Contaminants on the inside of the refrigerant piping will cause the refrigerant oil to deteriorate and cause the compressor to malfunction.

Use refrigerant pipes for use with R410A refrigerant system. Piping for systems for use with other types of refrigerants may not be able to be used.
Use refrigerant pipes with the thicknesses specified in the table below.

en

Size [mm (in)]	Radial thickness [mm (mil)]	Type
ø6.35 (ø1/4)	0.8 (32)	Type-O
ø9.52 (ø3/8)	0.8 (32)	Type-O
ø12.7 (ø1/2)	0.8 (32)	Type-O
ø15.88 (ø5/8)	1.0 (40)	Type-O
ø19.05 (ø3/4)	1.2 (48)	Type-O
	1.0 (40)	Type-1/2H or H
ø22.2 (ø7/8)	1.0 (40)	Type-1/2H or H
ø25.4 (ø1)	1.0 (40)	Type-1/2H or H
ø28.58 (ø1-1/8)	1.0 (40)	Type-1/2H or H
ø31.75 (ø1-1/4)	1.1 (44)	Type-1/2H or H
ø34.93 (ø1-3/8)	1.2 (48)	Type-1/2H or H
ø41.28 (ø1-5/8)	1.4 (56)	Type-1/2H or H

9-3. Twinning kit selection

Select appropriate twinning kits (sold separately), referring to the sections below.

* Use an adapter, if necessary, to connect a refrigerant pipe to a twinning pipe of a different diameter.

9-3-1. 2-Branch Joint Pipe

A 2-Branch Joint Pipe is used to connect multiple indoor units to a port, or to connect sub BC controllers.

(1) R2 system

2-Branch Joint Pipe between BC controllers and indoor units

Total capacity of downstream indoor units	Kit model
200 or below	CMY-Y102SS-G2
201 to 250	CMY-Y102LS-G2

2-Branch Joint Pipe between main and sub BC controllers

Total capacity of downstream indoor units	Kit model
350 or below	CMY-R201S-G
351 to 600	CMY-R202S-G
601 to 650	CMY-R203S-G
651 to 1000	CMY-R204S-G
1001 or above	CMY-R205S-G

Low-pressure Pipe Joint between outdoor units and sub BC controllers
(for P-JA type, P-KA type, and P-KB type BC controllers)

Outdoor unit capacity	Kit model
(E)P200 - (E)P650	CMY-R101S-G
(E)P700 - (E)P1100	CMY-R102S-G

(2) Hybrid City Multi system

- Connect the pipes on site, referring to the HBC controller Installation Manual.
- CMY-Y102SS-G2 and CMY-Y102LS-G2 are used in an R2 system, and cannot be used in a Hybrid City Multi system.

9-3-2. Joint Pipe Kit

A Joint Pipe Kit is used to connect an indoor unit of P/M100 model or above.

(1) R2 system

Indoor unit model	Kit model
P100 to P250/M100 to M140	CMY-R160-J1

* When connecting P100 through P250/M100 through M140 models of indoor units to two ports, set the dipswitch SW4-6 on the BC controller to ON.
* When including only PEFY-P50/63/71/80/100VMHS2-E units, connect the two ports and set the dipswitches SW4-1 and SW4-6 on the BC controller to ON.
* When connecting PEFY-P50/63/71/80/100VMHS2-E units to two ports, use a Joint Pipe Kit CMY-R160-J1.
* Although using a single port is possible, cooling performance will somewhat decrease. When connecting P/M100 through P/M140 models of indoor units or PEFY-P50/63/71/80/100VMHS2-E units to a single port, set the dipswitches SW4-1 and SW4-6 to OFF.

(2) Hybrid City Multi system

- Connect the pipes on site, referring to the HBC controller Installation Manual.
- CMY-R160-J1 is used in an R2 system, and cannot be used in a Hybrid City Multi system.

9-3-3. Outdoor unit twinning kit

Outdoor unit twinning kit is used to combine multiple outdoor units.

Total capacity of outdoor units	Kit model
(E)P400 to (E)P650YSNW	CMY-R100VBK4
(E)P700 to (E)P1100YSNW	CMY-R200VBK4

9-4. Pipe connection example

9-4-1. Example of pipe connection between outdoor units

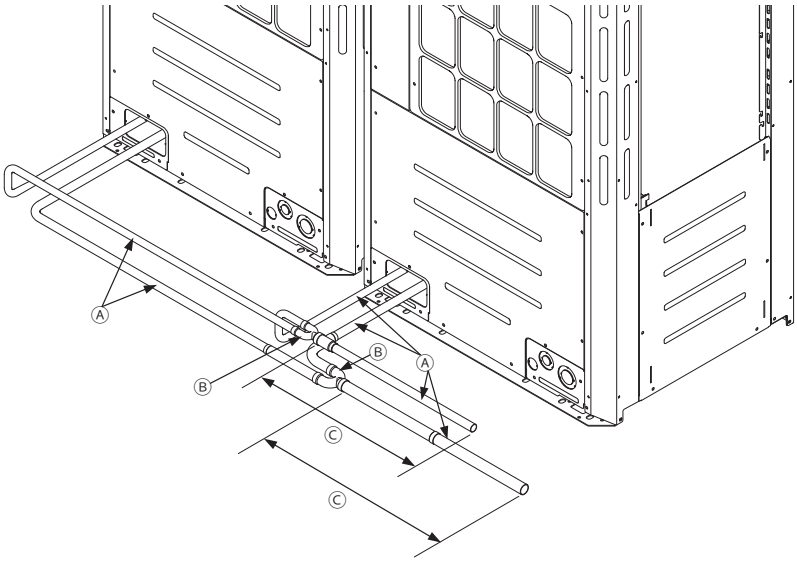

Ⓐ On-site piping
Ⓑ Twinning Kit
Ⓒ The pipe section before the twinning pipe must have at least 500 mm (19-11/16 in) of straight section.

- PURY-(E)P200YNW-A2/TR2 through PURY-(E)P500YNW-A2/TR2 can be used in a Hybrid City Multi system. Contact your dealer when connecting the larger capacity units in a Hybrid City Multi system.

9-4-2. Example of pipe connection between an outdoor unit and BC controller, and between a BC controller and indoor unit (R2 system)

Single

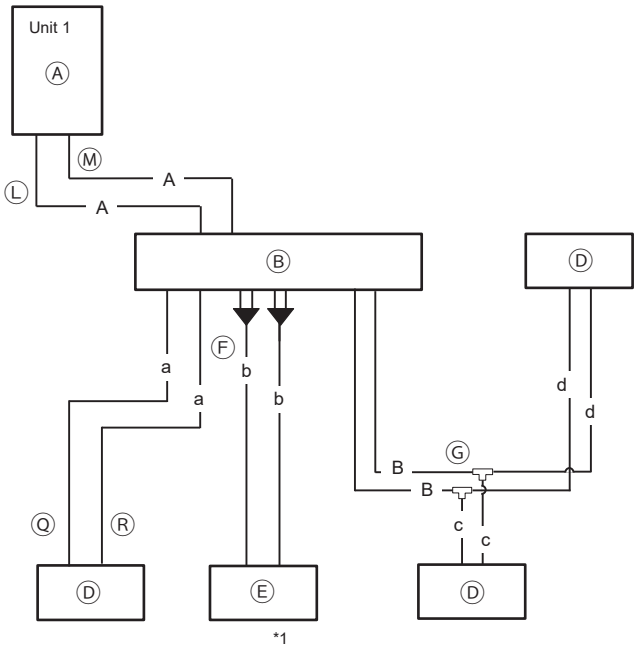

- Ⓐ Outdoor unit
- Ⓑ BC controller (Main)
- Ⓒ BC controller (Sub)
- Ⓓ Indoor unit (Total capacity of downstream indoor units: 10 to 80)
- Ⓔ Indoor unit (Total capacity of downstream indoor units: 100 to 250)
- Ⓕ Joint Pipe Kit
- Ⓖ 2-Branch Joint Pipe between BC controllers and indoor units
- Ⓗ 2-Branch Joint Pipe between main and sub BC controllers
- Ⓙ Low-pressure Pipe Joint between outdoor units and sub BC controllers
- Ⓚ Outdoor unit twinning kit
- Ⓛ High-pressure pipe (A, A_1, A_2)
- Ⓜ Low-pressure pipe (A, A_1, A_2)
- Ⓝ High-pressure pipe (C, D, E, F, G, H, J)
- Ⓞ Low-pressure pipe (C, D, E, F, G, H, J)
- Ⓟ Liquid pipe (C, D, E, F, G, H, J)
- Ⓠ Liquid pipe (a, b, c, d, e, f, g, h)
- Ⓡ Gas pipe (a, b, c, d, e, f, g, h)

Combination modules with main and sub BC controllers (P-JA type, P-KA type, and P-KB type)

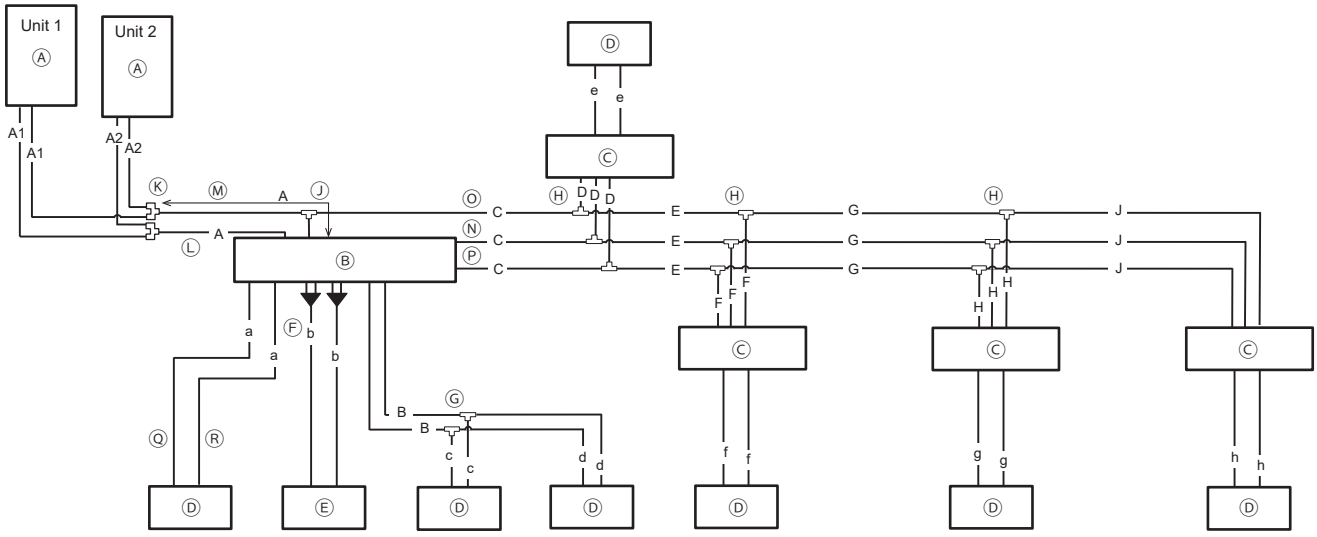

Combination modules with main and sub BC controllers (M-JA1 type, P-KA1 type, and M-KB1 type)

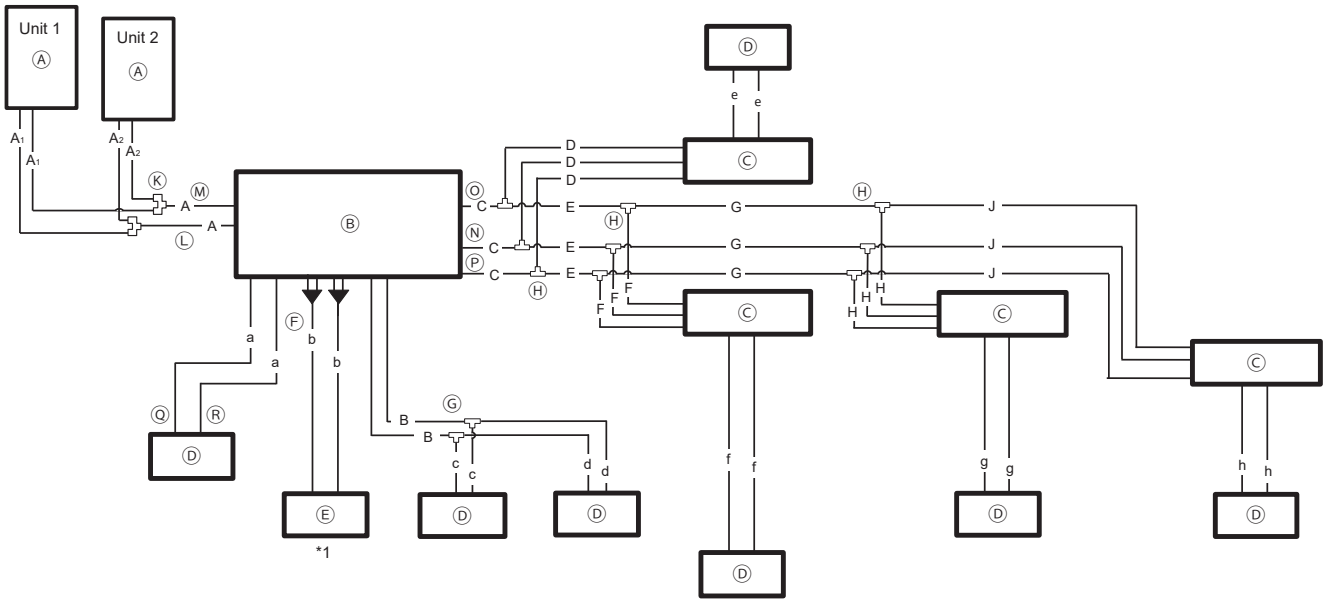

*1

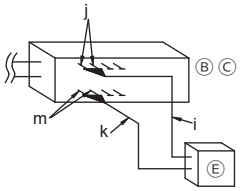

* Contact your dealer for pipe connection examples when connecting CMB-P**-V-G1, CMB-P**-V-GA1, CMB-P**-V-HA1, CMB-P**-V-GB1, or CMB-P**-V-HB1.

Pipes A, A_1, A_2 [mm (in)]

Unit model	Combination unit		Pipe A		Pipe A_1*1		Pipe A_2*1	
	Unit 1	Unit 2	High-pressure	Low-pressure	High-pressure	Low-pressure	High-pressure	Low-pressure
P200YNW	-	-	ø15.88 (5/8)	ø19.05 (3/4)	-	-	-	-
P250YNW	-	-	ø19.05 (3/4)	ø22.2 (7/8)	-	-	-	-
P300YNW	-	-	ø19.05 (3/4)	ø22.2 (7/8)	-	-	-	-
P350YNW	-	-	ø19.05 (3/4)	ø28.58 (1-1/8)	-	-	-	-
P400YNW	-	-	ø22.2 (7/8)	ø28.58 (1-1/8)	-	-	-	-
P400YSNW	P200	P200	ø22.2 (7/8)	ø28.58 (1-1/8)	ø15.88 (5/8)	ø19.05 (3/4)	ø15.88 (5/8)	ø19.05 (3/4)
P450YNW	-	-	ø22.2 (7/8)	ø28.58 (1-1/8)	-	-	-	-
P450YSNW	P250	P200	ø22.2 (7/8)	ø28.58 (1-1/8)	ø19.05 (3/4)	ø22.2 (7/8)	ø15.88 (5/8)	ø19.05 (3/4)
P500YNW	-	-	ø22.2 (7/8)	ø28.58 (1-1/8)	-	-	-	-
P500YSNW	P250	P250	ø22.2 (7/8)	ø28.58 (1-1/8)	ø19.05 (3/4)	ø22.2 (7/8)	ø19.05 (3/4)	ø22.2 (7/8)
P550YNW	-	-	ø22.2 (7/8)*2	ø28.58 (1-1/8)	-	-	-	-
P550YSNW	P300	P250	ø22.2 (7/8)*2	ø28.58 (1-1/8)	ø19.05 (3/4)	ø22.2 (7/8)	ø19.05 (3/4)	ø22.2 (7/8)
P600YSNW	P300	P300	ø22.2 (7/8)*2	ø28.58 (1-1/8)	ø19.05 (3/4)	ø22.2 (7/8)	ø19.05 (3/4)	ø22.2 (7/8)
P650YSNW	P350	P300	ø28.58 (1-1/8)	ø28.58 (1-1/8)	ø19.05 (3/4)	ø28.58 (1-1/8)	ø19.05 (3/4)	ø22.2 (7/8)
P700YSNW	P350	P350	ø28.58 (1-1/8)	ø34.93 (1-3/8)	ø19.05 (3/4)	ø28.58 (1-1/8)	ø19.05 (3/4)	ø28.58 (1-1/8)
P750YSNW	P400	P350	ø28.58 (1-1/8)	ø34.93 (1-3/8)	ø22.2 (7/8)	ø28.58 (1-1/8)	ø19.05 (3/4)	ø28.58 (1-1/8)
P800YSNW	P400	P400	ø28.58 (1-1/8)	ø34.93 (1-3/8)	ø22.2 (7/8)	ø28.58 (1-1/8)	ø22.2 (7/8)	ø28.58 (1-1/8)
P850YSNW	P450	P400	ø28.58 (1-1/8)	ø41.28 (1-5/8)	ø22.2 (7/8)	ø28.58 (1-1/8)	ø22.2 (7/8)	ø28.58 (1-1/8)
P900YSNW	P450	P450	ø28.58 (1-1/8)	ø41.28 (1-5/8)	ø22.2 (7/8)	ø28.58 (1-1/8)	ø22.2 (7/8)	ø28.58 (1-1/8)
P950YSNW	P500	P450	ø28.58 (1-1/8)	ø41.28 (1-5/8)	ø22.2 (7/8)	ø28.58 (1-1/8)	ø22.2 (7/8)	ø28.58 (1-1/8)
P1000YSNW	P500	P500	ø28.58 (1-1/8)	ø41.28 (1-5/8)	ø22.2 (7/8)	ø28.58 (1-1/8)	ø22.2 (7/8)	ø28.58 (1-1/8)
P1050YSNW	P550	P500	ø34.93 (1-3/8)	ø41.28 (1-5/8)	ø22.2 (7/8)	ø28.58 (1-1/8)	ø22.2 (7/8)	ø28.58 (1-1/8)
P1100YSNW	P550	P550	ø34.93 (1-3/8)	ø41.28 (1-5/8)	ø22.2 (7/8)	ø28.58 (1-1/8)	ø22.2 (7/8)	ø28.58 (1-1/8)

Pipes A, A_1, A_2 [mm (in)]

Unit model	Combination unit		Pipe A		Pipe A_1*1		Pipe A_2*1	
	Unit 1	Unit 2	High-pressure	Low-pressure	High-pressure	Low-pressure	High-pressure	Low-pressure
EP200YNW	-	-	ø15.88 (5/8)	ø19.05 (3/4)	-	-	-	-
EP250YNW	-	-	ø19.05 (3/4)	ø22.2 (7/8)	-	-	-	-
EP300YNW	-	-	ø19.05 (3/4)	ø22.2 (7/8)	-	-	-	-
EP350YNW	-	-	ø19.05 (3/4)	ø28.58 (1-1/8)	-	-	-	-
EP400YNW	-	-	ø22.2 (7/8)	ø28.58 (1-1/8)	-	-	-	-
EP400YSNW	EP200	EP200	ø22.2 (7/8)	ø28.58 (1-1/8)	ø15.88 (5/8)	ø19.05 (3/4)	ø15.88 (5/8)	ø19.05 (3/4)
EP450YNW	-	-	ø22.2 (7/8)	ø28.58 (1-1/8)	-	-	-	-
EP450YSNW	EP250	EP200	ø22.2 (7/8)	ø28.58 (1-1/8)	ø19.05 (3/4)	ø22.2 (7/8)	ø15.88 (5/8)	ø19.05 (3/4)
EP500YNW	-	-	ø22.2 (7/8)	ø28.58 (1-1/8)	-	-	-	-
EP500YSNW	EP250	EP250	ø22.2 (7/8)	ø28.58 (1-1/8)	ø19.05 (3/4)	ø22.2 (7/8)	ø19.05 (3/4)	ø22.2 (7/8)
EP550YNW	-	-	ø22.2 (7/8)*2	ø28.58 (1-1/8)	-	-	-	-
EP550YSNW	EP300	EP250	ø22.2 (7/8)*2	ø28.58 (1-1/8)	ø19.05 (3/4)	ø22.2 (7/8)	ø19.05 (3/4)	ø22.2 (7/8)
EP600YSNW	EP300	EP300	ø22.2 (7/8)*2	ø28.58 (1-1/8)	ø19.05 (3/4)	ø22.2 (7/8)	ø19.05 (3/4)	ø22.2 (7/8)
EP650YSNW	EP350	EP300	ø28.58 (1-1/8)	ø28.58 (1-1/8)	ø19.05 (3/4)	ø28.58 (1-1/8)	ø19.05 (3/4)	ø22.2 (7/8)
EP700YSNW	EP350	EP350	ø28.58 (1-1/8)	ø34.93 (1-3/8)	ø19.05 (3/4)	ø28.58 (1-1/8)	ø19.05 (3/4)	ø28.58 (1-1/8)
EP750YSNW	EP400	EP350	ø28.58 (1-1/8)	ø34.93 (1-3/8)	ø22.2 (7/8)	ø28.58 (1-1/8)	ø19.05 (3/4)	ø28.58 (1-1/8)
EP800YSNW	EP400	EP400	ø28.58 (1-1/8)	ø34.93 (1-3/8)	ø22.2 (7/8)	ø28.58 (1-1/8)	ø22.2 (7/8)	ø28.58 (1-1/8)
EP850YSNW	EP450	EP400	ø28.58 (1-1/8)	ø41.28 (1-5/8)	ø22.2 (7/8)	ø28.58 (1-1/8)	ø22.2 (7/8)	ø28.58 (1-1/8)
EP900YSNW	EP450	EP450	ø28.58 (1-1/8)	ø41.28 (1-5/8)	ø22.2 (7/8)	ø28.58 (1-1/8)	ø22.2 (7/8)	ø28.58 (1-1/8)
EP950YSNW	EP500	EP450	ø28.58 (1-1/8)	ø41.28 (1-5/8)	ø22.2 (7/8)	ø28.58 (1-1/8)	ø22.2 (7/8)	ø28.58 (1-1/8)
EP1000YSNW	EP500	EP500	ø28.58 (1-1/8)	ø41.28 (1-5/8)	ø22.2 (7/8)	ø28.58 (1-1/8)	ø22.2 (7/8)	ø28.58 (1-1/8)
EP1050YSNW	EP550	EP500	ø34.93 (1-3/8)	ø41.28 (1-5/8)	ø22.2 (7/8)	ø28.58 (1-1/8)	ø22.2 (7/8)	ø28.58 (1-1/8)
EP1100YSNW	EP550	EP550	ø34.93 (1-3/8)	ø41.28 (1-5/8)	ø22.2 (7/8)	ø28.58 (1-1/8)	ø22.2 (7/8)	ø28.58 (1-1/8)

*1 If the combination units 1 and 2 are in a different order as listed in the table, make sure to use the pipes of appropriate size for the situation.
*2 If the length of "High-pressure pipe A" exceeds 65 m (213 ft), use the ø28.58 (ø1-1/8) pipes for all pipes after 65 m (213 ft).

Pipe B [mm (in)]

Total capacity of indoor units	Pipe	
	Liquid	Gas
80 or below	ø9.52 (ø3/8)	ø15.88 (ø5/8)

Pipes C, D, E, F, G, H, J (*) [mm (in)]

Total model number of downstream indoor units	Pipe		
	High-pressure	Low-pressure	Liquid
200 or below	ø15.88 (ø5/8)	ø19.05 (ø3/4)	ø9.52 (ø3/8)
201 to 300	ø19.05 (ø3/4)	ø22.2 (ø7/8)	ø9.52 (ø3/8)
301 to 350	ø19.05 (ø3/4)	ø28.58 (ø1-1/8)	ø12.7 (ø1/2)
351 to 400	ø22.2 (ø7/8)	ø28.58 (ø1-1/8)	ø12.7 (ø1/2)
401 to 600	ø22.2 (ø7/8)	ø28.58 (ø1-1/8)	ø15.88 (ø5/8)
601 to 650	ø28.58 (ø1-1/8)	ø28.58 (ø1-1/8)	ø15.88 (ø5/8)
651 to 800	ø28.58 (ø1-1/8)	ø34.93 (ø1-3/8)	ø19.05 (ø3/4)
801 to 1000	ø28.58 (ø1-1/8)	ø41.28 (ø1-5/8)	ø19.05 (ø3/4)
1001 or above	ø34.93 (ø1-3/8)	ø41.28 (ø1-5/8)	ø19.05 (ø3/4)

Pipes a, b, c, d, e, f, g, h (*) [mm (in)]

Capacity index of indoor unit	Pipe	
	Liquid	Gas
10, 15, 20, 25, 32, 40, 50	ø6.35 (ø1/4)	ø12.7 (ø1/2)
63, 71, 80, 100, 125, 140	ø9.52 (ø3/8)	ø15.88 (ø5/8)
200	ø9.52 (ø3/8)	ø19.05 (ø3/4)
250	ø9.52 (ø3/8)	ø22.2 (ø7/8)

Pipes i, j, k, m (*) [mm (in)]

Capacity index of indoor unit	Liquid pipe		Gas pipe	
	i	j	k	m
100	ø9.52 (ø3/8)	ø9.52 (ø3/8)	ø15.88 (ø5/8)	ø15.88 (ø5/8)
125	ø9.52 (ø3/8)	ø9.52 (ø3/8)	ø15.88 (ø5/8)	ø15.88 (ø5/8)
140	ø9.52 (ø3/8)	ø9.52 (ø3/8)	ø15.88 (ø5/8)	ø15.88 (ø5/8)
200	ø9.52 (ø3/8)	ø9.52 (ø3/8)	ø19.05 (ø3/4)	ø15.88 (ø5/8)
250	ø9.52 (ø3/8)	ø9.52 (ø3/8)	ø22.2 (ø7/8)	ø15.88 (ø5/8)

* If the length of high-pressure pipe or liquid-pipe exceeds the restriction, use the one size larger pipe. Refer to the BC controller Installation Manual for details.

9-4-3. Example of pipe connection between an outdoor unit and HBC controller, and between an HBC controller and indoor unit (Hybrid City Multi system)

Refer to the HBC controller Installation Manual for details.

9-5. Piping connections and valve operations

⚠ WARNING

Before heating the brazed sections, remove the gas and oil that are trapped in the pipes.
- Failure to do so may generate fire, resulting in serious injury.

Ventilate the room while servicing the unit.
- If the refrigerant leaks, oxygen deficiency may result. If the leaked refrigerant comes in contact with a heat source, toxic gas will be generated.

CAUTION

Store pipes indoors, and keep both ends of the pipes sealed until just before making a flare connection or brazing. (Store elbows and other joints in plastic bags.)
- If dust, dirt, or water enters the refrigerant lines, the refrigerant oil will deteriorate and the compressor will malfunction.

Keep the service valves closed until refrigerant charging is completed.
- Failure to do so will damage the unit.

Place a wet towel on the service valves before brazing the pipes to keep the temperature of the valves from rising above 120ºC (248ºF).
- Failure to do so may result in equipment damage.

Keep the flame out of contact with the cables and metal sheet when brazing the pipes.
- Failure to do so may result in burnout or malfunction.

Braze the pipes with a nitrogen purge to avoid oxidation.
- Oxidized flux inside the refrigerant pipes will cause the refrigerant oil to deteriorate and cause the compressor to malfunction.

9-5-1. Removing the pinched connecting pipes

The unit is shipped with the pinched connecting pipes attached to the high-pressure and low-pressure side service valves to prevent gas leakage.
Take the following steps ① through ③ to remove the pinched connecting pipes before connecting refrigerant pipes to the outdoor unit.

① Check that the service valves are fully closed (turned clockwise all the way).
② Remove the gas in the pinched connecting pipes, and drain out all the refrigerant oil. (See Ⓓ below.)
③ Remove the pinched connecting pipes. (See Ⓔ below.)

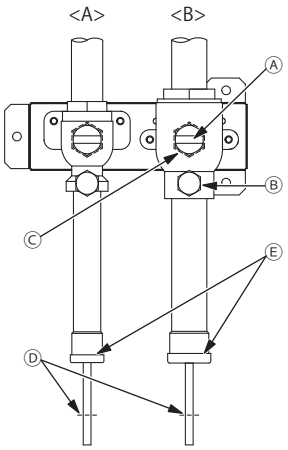

<A> Refrigerant service valve (high-pressure/brazed)
<B> Refrigerant service valve (low-pressure/brazed)
Ⓐ Valve shaft
The unit is shipped with the valve closed. Keep the valve closed while connecting pipes or evacuating the system. Open the valve upon completion of this work.
Turn the shaft counterclockwise as far as it will go (90˚) to open the valve, and clockwise to close it.
Ⓑ Service port
Through the service ports, you can charge refrigerant, remove the gas in the pinched connecting pipes, or evacuate the system.
Ⓒ Cap
Remove the cap before turning the shaft. Put the cap back on upon completion of all work.
Ⓓ Severed section of the pinched connecting pipe
Ⓔ Brazed section of the pinched connecting pipe

Opening or closing direction of the valve
(high-pressure or low-pressure/brazed)

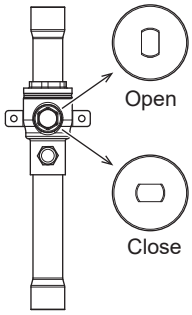

9-5-2. Connecting pipes

- The refrigerant pipe from the outdoor unit is branched at the pipe end, and each branch is then connected to an indoor unit.

		Connecting method
Indoor unit		Brazed or flared
Outdoor unit	High-pressure pipe	Brazed
	Low-pressure pipe	Brazed
Branched section		Brazed

- When connecting pipes, make sure the service valves are completely closed.
- Commercially available pipes often contain dust or debris. Always blow them clean with a dry inert gas.
- Take care to prevent dust, water or other contaminants from entering the pipes during installation.
- Reduce the number of bending portions as much as possible, and make the bending radius as big as possible.
- Do not use any commercially available anti-oxidizing agents since they may cause pipe corrosion and degrading of the refrigerant oil. Please contact Mitsubishi Electric for more details.
- Make sure that the pipes are not in contact with each other, unit panels, or base plates.
- Refer to the twinning kit Installation Manual for how to install the twinning kit.

<Refrigerant piping connection examples>

- Obtain joints and elbows on site as necessary according to the pipe diameter, and connect the pipes as shown in the figures below.

(1) When routing the pipes through the front of the unit

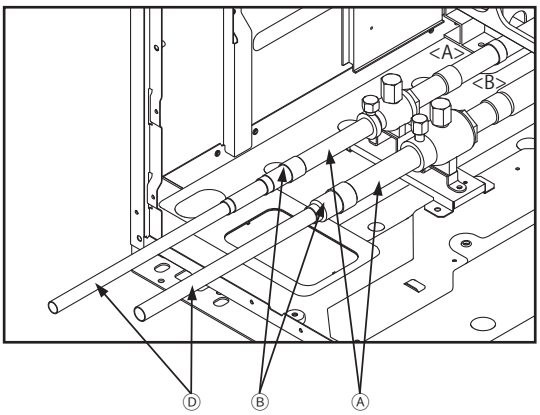

(2) When routing the pipes through the bottom of the unit

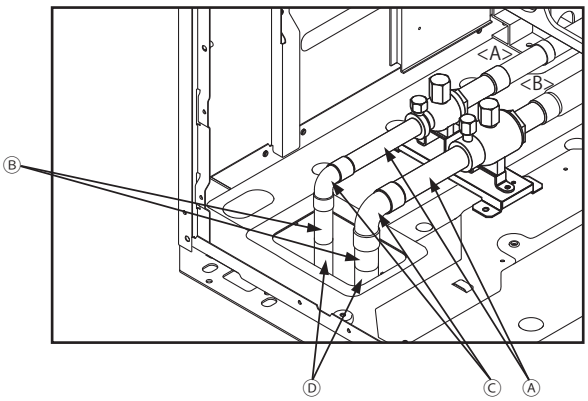

<A> High-pressure side
<B> Low-pressure side
Ⓐ Refrigerant service valve piping
Ⓑ Reducer etc.
Ⓒ Elbow
Ⓓ On-site piping

<Reference> Size of refrigerant pipes

<table>
<tr><th rowspan="2"></th><th colspan="2">On-site piping [mm (in)]</th><th colspan="2">Service valve piping [mm (in)]</th></tr>
<tr><th>High-pressure side</th><th>Low-pressure side</th><th>High-pressure side</th><th>Low-pressure side</th></tr>
<tr><td>P200</td><td>ø15.88 (ø5/8)</td><td>ø19.05 (ø3/4)</td><td rowspan="2">ø22.2 (ø7/8)</td><td rowspan="7">ø28.58 (ø1-1/8)</td></tr>
<tr><td>P250</td><td rowspan="3">ø19.05 (ø3/4)</td><td rowspan="2">ø22.2 (ø7/8)</td></tr>
<tr><td>P300</td></tr>
<tr><td>P350</td><td rowspan="5">ø28.58 (ø1-1/8)</td><td rowspan="5">ø28.58 (ø1-1/8)</td></tr>
<tr><td>P400</td><td rowspan="3">ø22.2 (ø7/8)</td></tr>
<tr><td>P450</td></tr>
<tr><td>P500</td></tr>
<tr><td>P550</td><td>ø22.2 (ø7/8)*1
ø28.58 (ø1-1/8)*2</td></tr>
</table>

<table>
<tr><th rowspan="2"></th><th colspan="2">On-site piping [mm (in)]</th><th colspan="2">Service valve piping [mm (in)]</th></tr>
<tr><th>High-pressure side</th><th>Low-pressure side</th><th>High-pressure side</th><th>Low-pressure side</th></tr>
<tr><td>EP200</td><td>ø15.88 (ø5/8)</td><td>ø19.05 (ø3/4)</td><td rowspan="2">ø22.2 (ø7/8)</td><td rowspan="7">ø28.58 (ø1-1/8)</td></tr>
<tr><td>EP250</td><td rowspan="3">ø19.05 (ø3/4)</td><td rowspan="2">ø22.2 (ø7/8)</td></tr>
<tr><td>EP300</td></tr>
<tr><td>EP350</td><td rowspan="5">ø28.58 (ø1-1/8)</td><td rowspan="5">ø28.58 (ø1-1/8)</td></tr>
<tr><td>EP400</td><td rowspan="3">ø22.2 (ø7/8)</td></tr>
<tr><td>EP450</td></tr>
<tr><td>EP500</td></tr>
<tr><td>EP550</td><td>ø22.2 (ø7/8)*1
ø28.58 (ø1-1/8)*2</td></tr>
</table>

*1 For the length within 65 m (213 ft)
*2 For the length that exceeds 65 m (213 ft)

- When expanding the on-site piping, satisfy the minimum insertion depth requirement as follows.

Pipe size [mm (in)]	Minimum insertion depth [mm (in)]
ø5 (ø1/4) or more, less than ø8 (ø3/8)	6 (1/4)
ø8 (ø3/8) or more, less than ø12 (ø1/2)	7 (5/16)
ø12 (ø1/2) or more, less than ø16 (ø11/16)	8 (3/8)
ø16 (ø11/16) or more, less than ø25 (ø1)	10 (7/16)
ø25 (ø1) or more, less than ø35 (ø1-7/16)	12 (1/2)
ø35 (ø1-7/16) or more, less than ø45 (ø1-13/16)	14 (9/16)

9-5-3. Sealing the openings around the pipes

⚠ WARNING

Seal all openings around pipes and wires to keep out small animals, rainwater, or snow.
- Failure to do so may result in current leakage, electric shock, or damage to the unit.

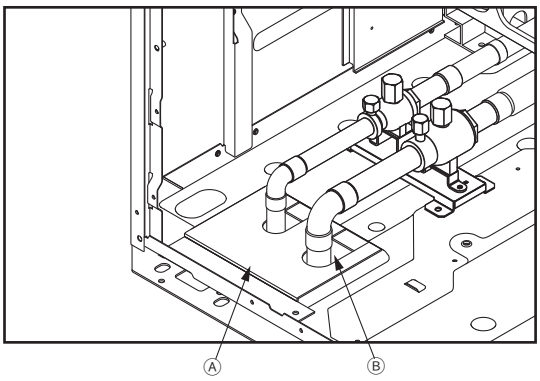

Ⓐ Example of closure materials (not supplied)
Ⓑ Fill the openings

9-6. Air-tightness test

WARNING

Do not use oxygen, flammable gas, or a refrigerant containing chlorine for air-tightness testing.

- Doing so may result in an explosion. Chlorine will deteriorate the refrigerant oil.

After refrigerant pipe installation is completed, check the system for leaks by conducting an air-tightness test. If there is a leak, the composition of the refrigerant will change and the performance will drop.

<Air-tightness test procedures>

① Make sure the service valves are closed.

② Add pressure to the refrigerant pipes through the service ports of the high-pressure and low-pressure pipes.
* Pressurize to the design pressure (4.15 MPa) using nitrogen gas.

③ If the pressure holds for one day and does not decrease, the pipes have passed the test and there are no leaks. If the pressure decreases, there is a leak. Look for the source of the leak by spraying a bubbling agent (e.g., Gupoflex) on the flared or brazed sections.

④ Wipe off the bubbling agent.

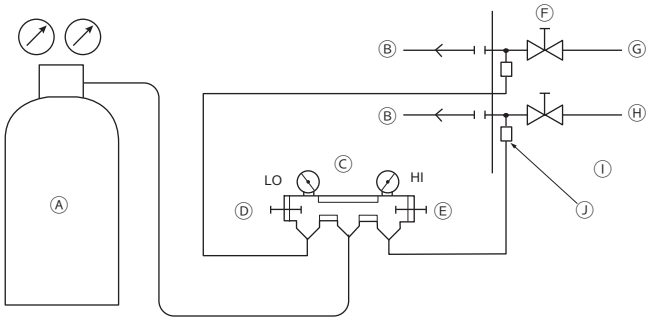

Ⓐ Nitrogen gas
Ⓑ To indoor unit
Ⓒ Gauge manifold
Ⓓ Low pressure knob
Ⓔ High pressure knob
Ⓕ Service valve
Ⓖ Low-pressure pipe
Ⓗ High-pressure pipe
Ⓘ Outdoor unit
Ⓙ Service port

en

9-7. Thermal insulation for pipes

CAUTION

Insulate pipes to prevent condensation.

- Condensation may collect and drip from the unit onto the ceiling or floor.

Insulate the high- and low-pressure pipes, and liquid and gas pipes separately with polyethylene foam insulation materials. Inadequate insulation may cause condensation to drip. Pipes in the ceiling are especially vulnerable to condensation and require adequate insulation.

9-7-1. Insulation material

- Check that the insulation materials meet the standards in the table below.

Between an outdoor unit and BC controller (R2 system), between BC controllers, or between an outdoor unit and HBC controller (Hybrid City Multi system)

	High-pressure pipe	Low-pressure pipe
Thickness [mm (in)]	Min. 10 (7/16)	Min. 20 (13/16)
Heat resistance	Min. 120°C (248°F)	

Between a BC controller and indoor unit (R2 system)

	Pipe size [mm (in)]	
	ø6.35 (ø1/4)–ø25.4 (ø1)	ø28.58 (ø1-1/8) or above
Thickness [mm (in)]	Min. 10 (7/16)	Min. 15 (5/8)
Heat resistance	Min. 120°C (248°F)	

* The insulation thickness may need to be increased in high-temperature/humidity conditions.
* Even when specifications are defined by your client, the standards in the table should be met.

Between an HBC controller and indoor unit (Hybrid City Multi system)
Refer to the HBC controller Installation Manual for details.

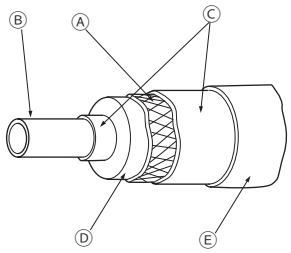

Ⓐ Steel wire
Ⓑ Pipe
Ⓒ Oily mastic asphalt or asphalt
Ⓓ Insulation material A
Ⓔ Outer covering B

Insulation material A	Glass fiber + Steel wire	
	Adhesive + Heat-resistant polyethylene foam + Adhesive tape	
Outer covering B	Indoor	Vinyl tape
	Under the floor and exposed	Waterproof hemp cloth + Bronze asphalt
	Outdoor	Waterproof hemp cloth + Zinc plate + Oily paint

* If a polyethylene cover is used as an outer covering, asphalt roofing is not necessary.

- Do not insulate the electric wires.

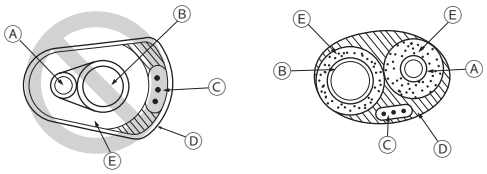

Ⓐ High-pressure pipe or liquid pipe
Ⓑ Low-pressure pipe or gas pipe
Ⓒ Electric wire
Ⓓ Finishing tape
Ⓔ Insulation material

- Make sure that the pipe connections all the way from the indoor unit are properly insulated.

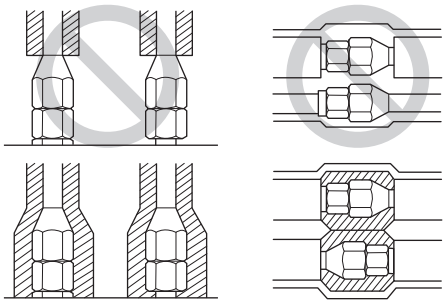

9-7-2. Insulation for the section of the pipe that goes through a wall

(1) Inner wall (concealed)

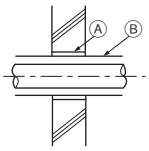

(2) Outer wall

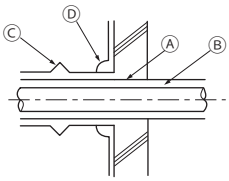

(3) Outer wall (exposed)

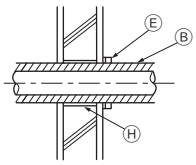

(4) Floor (waterproof)

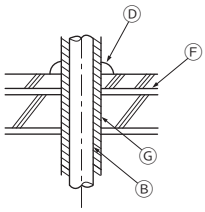

(5) Rooftop pipe shaft

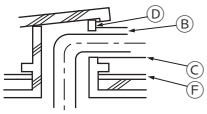

(6) Protecting the penetrating parts in a fire limit zone or through a parting wall

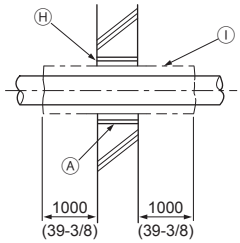

[mm (in)]

Ⓐ Sleeve
Ⓑ Insulation material
Ⓒ Lagging
Ⓓ Caulking material
Ⓔ Band
Ⓕ Waterproof layer
Ⓖ Sleeve with a flange
Ⓗ Caulk with a nonflammable material such as mortar.
Ⓘ Nonflammable insulation material

- When caulking the gaps with mortar, cover the section of the pipe that goes through the wall with a metal sheet to prevent the insulation material from sagging. For this section, use nonflammable insulation and covering materials. (Vinyl tape should not be used.)

9-8. Evacuation of the system

⚠ WARNING

Do not purge the air using refrigerant. Use a vacuum pump to evacuate the system.

- Residual gas in the refrigerant lines will cause bursting of the pipes or an explosion.

CAUTION

Use a vacuum pump with a check valve.

- If the vacuum pump oil flows back into the refrigerant lines, the refrigerant oil may deteriorate and the compressor may malfunction.

<Evacuation procedures>

① Evacuate the system from both service ports, using a vacuum pump with the service valves closed.

② After the vacuum reaches 650 Pa (0.0943 psi/5 Torr), continue evacuation for at least one hour. When the outdoor temperature drops below 1ºC (or when the saturation pressure drops below 656 Pa (0.0951 psi/5 Torr)), continue evacuation for another 1 hour after the vacuum degree has reached the saturated vapor pressure of the water (ice) at the outdoor temperature. When performing evacuation at a low outdoor temperature, use a vacuum gauge appropriate for the temperature range.

Degree of vacuum (reference)

Outdoor temperature	-20ºC (-4ºF)	-15ºC (5ºF)	-10ºC (14ºF)	-5ºC (23ºF)	0ºC (32ºF)
Degree of vacuum	0.77 Torr (103 Pa)	1.24 Torr (165 Pa)	1.95 Torr (260 Pa)	3.01 Torr (402 Pa)	4.58 Torr (611 Pa)

* The degrees of vacuum shown above are obtained based on the saturated vapor pressure of ice.
* In a system using water heat exchangers, circulate water to prevent the water from freezing during evacuation.

③ Stop the vacuum pump and leave it for an hour.

④ Verify that the vacuum has not increased by more than 130 Pa (0.01886 psi/1 Torr).

⑤ If the vacuum has increased by more than 130 Pa, water infiltration is suspected. Pressurize the system with dry nitrogen gas up to 0.05 MPa (7.25 psi/375 Torr). Repeat ① though ⑤ until the vacuum is increased by 130 Pa or below. If the results persist, then perform the "Triple Evacuation" below.

<Triple Evacuation>

① Evacuate the system to 533 Pa (0.07729 psi/4 Torr) from both service ports, using a vacuum pump.

② Pressurize the system with dry nitrogen gas up to 0 Pa (0 psi/0 Torr) from the discharge service port.

③ Evacuate the system to 200 Pa (0.029 psi/1.5 Torr) from the suction service port, using a vacuum pump.

④ Pressurize the system with dry nitrogen gas up to 0 Pa (0 psi/0 Torr) from the discharge service port.

⑤ Evacuate the system from both service ports, using a vacuum pump.

⑥ After the vacuum reaches 66.7 Pa (0.09672 psi/5 Torr), stop the vacuum pump and leave it for an hour. A vacuum of 66.7 Pa must be maintained for at least one hour.

⑦ Verify that the vacuum has not increased for at least 30 minutes.

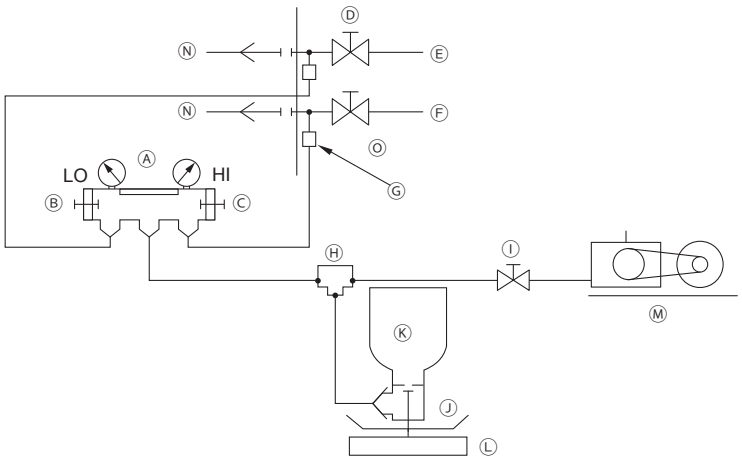

Ⓐ Gauge manifold
Ⓑ Low pressure knob
Ⓒ High pressure knob
Ⓓ Service valve
Ⓔ Low-pressure pipe
Ⓕ High-pressure pipe
Ⓖ Service port
Ⓗ Three-way joint
Ⓘ Valve (vacuum pump)
Ⓙ Valve (for charging refrigerant)
Ⓚ Refrigerant tank
Ⓛ Scale
Ⓜ Vacuum pump
Ⓝ To indoor unit
Ⓞ Outdoor unit

- Use a scale that can measure down to 0.1 kg (0.1 oz).
- Recommended vacuum gauge: ROBINAIR 14830A Thermistor Vacuum Gauge or Micron Gauge
- Do not use a gauge manifold to measure the vacuum pressure.
- Use a vacuum pump capable of attaining a vacuum of 65 Pa (abs) (0.00943 psi/0.5 Torr) within five minutes of operation.

9-9. Additional refrigerant charge

CAUTION

Charge refrigerant in a liquid state.

- Charging refrigerant in the gaseous state will change the composition of the refrigerant and lead to a performance drop.

Do not use a charging cylinder when charging refrigerant.

- The use of a charging cylinder may change the composition of the refrigerant and lead to a performance drop.

The table below summarizes the factory-charged amount of refrigerant, the maximum amount of refrigerant to be added on site, and the maximum total amount of refrigerant in the system.

[kg (oz)]

Unit model	Factory-charged amount	Maximum amount to be added on site	Maximum total amount in the system
P200YNW	5.2 (184)	31.8 (1122)	37.0 (1306)
P250YNW	5.2 (184)	37.8 (1333)	43.0 (1517)
P300YNW	5.2 (184)	37.8 (1333)	43.0 (1517)
P350YNW	8.0 (283)	41.3 (1457)	49.3 (1740)
P400YNW	8.0 (283)	47.3 (1668)	55.3 (1951)
P400YSNW	10.4 (367)	48.6 (1715)	59.0 (2082)
P450YNW	10.8 (381)	44.5 (1570)	55.3 (1951)
P450YSNW	10.4 (367)	48.6 (1715)	59.0 (2082)
P500YNW	10.8 (381)	45.2 (1595)	56.0 (1976)
P500YSNW	10.4 (367)	48.6 (1715)	59.0 (2082)
P550YNW	10.8 (381)	45.2 (1595)	56.0 (1976)
P550YSNW	10.4 (367)	48.6 (1715)	59.0 (2082)
P600YSNW	10.4 (367)	48.6 (1715)	59.0 (2082)
P650YSNW	13.2 (466)	45.8 (1616)	59.0 (2082)
P700YSNW	16.0 (565)	70.0 (2470)	86.0 (3034)
P750YSNW	16.0 (565)	70.0 (2470)	86.0 (3034)
P800YSNW	16.0 (565)	70.0 (2470)	86.0 (3034)
P850YSNW	18.8 (664)	67.2 (2371)	86.0 (3034)
P900YSNW	21.6 (762)	64.4 (2272)	86.0 (3034)
P950YSNW	21.6 (762)	64.4 (2272)	86.0 (3034)
P1000YSNW	21.6 (762)	64.4 (2272)	86.0 (3034)
P1050YSNW	21.6 (762)	64.4 (2272)	86.0 (3034)
P1100YSNW	21.6 (762)	64.4 (2272)	86.0 (3034)

Unit model	Factory-charged amount	Maximum amount to be added on site	Maximum total amount in the system
EP200YNW	5.2 (184)	28.3 (998)	33.5 (1182)
EP250YNW	5.2 (184)	34.3 (1210)	39.5 (1394)
EP300YNW	5.2 (184)	34.3 (1210)	39.5 (1394)
EP350YNW	8.0 (283)	39.0 (1375)	47.0 (1658)
EP400YNW	8.0 (283)	39.0 (1375)	47.0 (1658)
EP400YSNW	10.4 (367)	48.6 (1715)	59.0 (2082)
EP450YNW	10.8 (381)	44.7 (1577)	55.5 (1958)
EP450YSNW	10.4 (367)	48.6 (1715)	59.0 (2082)
EP500YNW	10.8 (381)	45.2 (1595)	56.0 (1976)
EP500YSNW	10.4 (367)	48.6 (1715)	59.0 (2082)
EP550YNW	10.8 (381)	45.2 (1595)	56.0 (1976)
EP550YSNW	10.4 (367)	48.6 (1715)	59.0 (2082)
EP600YSNW	10.4 (367)	48.6 (1715)	59.0 (2082)
EP650YSNW	13.2 (466)	45.8 (1616)	59.0 (2082)
EP700YSNW	16.0 (565)	70.0 (2470)	86.0 (3034)
EP750YSNW	16.0 (565)	70.0 (2470)	86.0 (3034)
EP800YSNW	16.0 (565)	70.0 (2470)	86.0 (3034)
EP850YSNW	18.8 (664)	67.2 (2371)	86.0 (3034)
EP900YSNW	21.6 (762)	64.4 (2272)	86.0 (3034)
EP950YSNW	21.6 (762)	64.4 (2272)	86.0 (3034)
EP1000YSNW	21.6 (762)	64.4 (2272)	86.0 (3034)
EP1050YSNW	21.6 (762)	64.4 (2272)	86.0 (3034)
EP1100YSNW	21.6 (762)	64.4 (2272)	86.0 (3034)

Both refrigerant overcharge and undercharge will cause problems. Charge the system with the proper amount of refrigerant.
Record the added refrigerant amount on the label attached to the control box panel for future servicing.

9-9-1. Calculation of the amount of additional refrigerant

- The amount of refrigerant to be added depends on the size and the total length of the high-pressure piping and liquid piping.
- Calculate the amount of refrigerant to be charged according to the formula below.
- Round up the calculation result to the nearest 0.1 kg (0.1 oz).
- Refer to the HBC controller Installation Manual for the additional amount of refrigerant for a Hybrid City Multi system.
- The refrigerant does not need to be added for the indoor units in a Hybrid City Multi system.

(1) Units "m" and "kg" (In an R2 system)

<Formula>

• When the piping length from the outdoor unit to the farthest indoor unit is 30.5 m (100 ft) or shorter

Amount of additional charge (kg)	=	High-pressure pipe ø34.93 total length × 0.58 (kg/m)	+	High-pressure pipe ø28.58 total length × 0.36 (kg/m)	+	High-pressure pipe ø22.2 total length × 0.23 (kg/m)	+	High-pressure pipe ø19.05 total length × 0.16 (kg/m)	+	High-pressure pipe ø15.88 total length × 0.11 (kg/m)
	+	Liquid pipe ø19.05 total length × 0.29 (kg/m)	+	Liquid pipe ø15.88 total length × 0.2 (kg/m)	+	Liquid pipe ø12.7 total length × 0.12 (kg/m)	+	Liquid pipe ø9.52 total length × 0.06 (kg/m)	+	Liquid pipe ø6.35 total length × 0.024 (kg/m)

+

Main or sub BC controller	Amount (kg/unit)
J(1)-type	1.5
JA(1)-type	3.0
KA(1)-type	4.7
KB(1)-type	0.4

+

Total capacity of connected indoor units	Amount (kg) (to be added for indoor unit)
80 or below	2.0
81 to 160	2.5
161 to 330	3.0
331 to 390	3.5
391 to 480	4.5
481 to 630	5.0
631 to 710	6.0
711 to 800	8.0
801 to 890	9.0
891 to 1070	10.0
1071 to 1250	12.0
1251 or above	14.0

+

Ⓐ

Outdoor unit model		Amount (kg)
Single	200	1.5
	250	1.5
	300	2.5
	350	3.5
	400	3.5
	450	3
	500	4
	550	5
Combination	400	6
	450	6
	500	6
	550	6
	600	6
	650	4.5
	700	5
	750	5
	800	5
	850	4
	900	3
	950	3
	1000	3
	1050	1.5
	1100	1.5

* Table Ⓐ does not apply to the indoor units listed in a separate document “Additional refrigerant charge.”
  To the indoor units listed in document, add the amount of refrigerant specified in the document.
  The document is available for download at http://www.mitsubishielectric.com/ldg/ibim/.
  Access the site, and enter the region and the outdoor unit model (not the indoor unit model) to be connected to see the document.
  The indoor units not listed in the separate document “Additional refrigerant charge” must be charged with the additional amount of refrigerant shown in Table Ⓐ.
* Contact your dealer for the amount of refrigerant to be added when connecting CMB-P**-V-G1, CMB-P**-V-GA1, CMB-P**-V-HA1, CMB-P**-V-GB1, or CMB-P**-V-HB1.
* When connecting LEV kit (PAC-LV11M-J), additional refrigerant charge may be required. Refer to the installation manual of the LEV kit.

• When the piping length from the outdoor unit to the farthest indoor unit is longer than 30.5 m (100 ft)

Amount of additional charge (kg)	=	High-pressure pipe ø34.93 total length × 0.52 (kg/m)	+	High-pressure pipe ø28.58 total length × 0.33 (kg/m)	+	High-pressure pipe ø22.2 total length × 0.21 (kg/m)	+	High-pressure pipe ø19.05 total length × 0.14 (kg/m)	+	High-pressure pipe ø15.88 total length × 0.1 (kg/m)
	+	Liquid pipe ø19.05 total length × 0.26 (kg/m)	+	Liquid pipe ø15.88 total length × 0.18 (kg/m)	+	Liquid pipe ø12.7 total length × 0.11 (kg/m)	+	Liquid pipe ø9.52 total length × 0.054 (kg/m)	+	Liquid pipe ø6.35 total length × 0.021 (kg/m)

+

Main or sub BC controller	Amount (kg/unit)
J(1)-type	1.5
JA(1)-type	3.0
KA(1)-type	4.7
KB(1)-type	0.4

+

Total capacity of connected indoor units	Amount (kg) (to be added for indoor unit)
80 or below	2.0
81 to 160	2.5
161 to 330	3.0
331 to 390	3.5
391 to 480	4.5
481 to 630	5.0
631 to 710	6.0
711 to 800	8.0
801 to 890	9.0
891 to 1070	10.0
1071 to 1250	12.0
1251 or above	14.0

* When the piping length from the outdoor unit to the farthest indoor unit is longer than 30.5 m (100 ft), additional refrigerant charge shown in "Additional refrigerant charge" is not necessary.
* Contact your dealer for the amount of refrigerant to be added when connecting CMB-P**-V-G1, CMB-P**-V-GA1, CMB-P**-V-HA1, CMB-P**-V-GB1, or CMB-P**-V-HB1.
* When connecting LEV kit (PAC-LV11M-J), additional refrigerant charge may be required. Refer to the installation manual of the LEV kit.

<Example>

Outdoor unit 1 model: EP300YNW
Outdoor unit 2 model: EP300YNW
BC controller (Main) model: CMB-M108V-JA1
BC controller (Sub) model: CMB-M104V-KB1 × 4 units
Total capacity of connected indoor units: 530

* Refer to the pipe connection examples in section 9-4 for the pipes marked with the letters below.

A: ø28.58; 40 m
B: ø9.52; 10 m
C: ø9.52; 5 m
D: ø9.52; 5 m
E: ø9.52; 5 m
F: ø9.52; 5 m
G: ø9.52; 5 m
H: ø9.52; 5 m
J: ø9.52; 5 m

A_1: ø19.05; 3 m
A_2: ø19.05; 1 m
a: ø9.52; 10 m
b: ø9.52; 5 m
c: ø6.35; 5 m
d: ø6.35; 10 m
e: ø6.35; 5 m
f: ø9.52; 5 m
g: ø9.52; 5 m
h: ø9.52; 5 m

The total length of the high-pressure piping and liquid piping in each case is as follows:
ø28.58 total length: 40 (A)
ø19.05 total length: 3 (A_1) + 1 (A_2) = 4
ø9.52 total length: 10 (B) + 5 (C) + 5 (D) + 5 (E) + 5 (F) + 5 (G) + 5 (H) + 5 (J) + 10 (a) + 5 (b) + 5 (f) + 5 (g) + 5 (h) = 75
ø6.35 total length: 5 (c) + 10 (d) + 5 (e) = 20

Therefore, when the piping length from the outdoor unit to the farthest indoor unit is longer than 30.5 m (100 ft),
Amount of additional charge = (40 × 0.33) + (4 × 0.14) + (75 × 0.054) + (20 × 0.021) + 3.0 + (0.4 × 4) + 5
= 27.9 kg (Fractions are rounded up.)

(2) Units "ft" and "oz" (In an R2 system)

<Formula>

• When the piping length from the outdoor unit to the farthest indoor unit is 30.5 m (100 ft) or shorter

Amount of additional charge (oz)	=	High-pressure pipe ø1-3/8 total length × 6.24 (oz/ft)	+	High-pressure pipe ø1-1/8 total length × 3.88 (oz/ft)	+	High-pressure pipe ø7/8 total length × 2.48 (oz/ft)	+	High-pressure pipe ø3/4 total length × 1.73 (oz/ft)	+	High-pressure pipe ø5/8 total length × 1.19 (oz/ft)
	+	Liquid pipe ø3/4 total length × 3.12 (oz/ft)	+	Liquid pipe ø5/8 total length × 2.16 (oz/ft)	+	Liquid pipe ø1/2 total length × 1.30 (oz/ft)	+	Liquid pipe ø3/8 total length × 0.65 (oz/ft)	+	Liquid pipe ø1/4 total length × 0.26 (oz/ft)

+

Main or sub BC controller	Amount (oz/unit)
J(1)-type	53
JA(1)-type	106
KA(1)-type	166
KB(1)-type	15

+

Total capacity of connected indoor units	Amount (oz) (to be added for indoor unit)
80 or below	71
81 to 160	89
161 to 330	106
331 to 390	124
391 to 480	159
481 to 630	177
631 to 710	212
711 to 800	283
801 to 890	318
891 to 1070	353
1071 to 1250	424
1251 or above	494

+

Ⓑ

Outdoor unit model		Amount (oz)
Single	200	53
	250	53
	300	89
	350	124
	400	124
	450	106
	500	142
	550	177
Combination	400	212
	450	212
	500	212
	550	212
	600	212
	650	159
	700	177
	750	177
	800	177
	850	142
	900	106
	950	106
	1000	106
	1050	53
	1100	53

* Table Ⓑ does not apply to the indoor units listed in a separate document “Additional refrigerant charge.”
  To the indoor units listed in document, add the amount of refrigerant specified in the document.
  The document is available for download at http://www.mitsubishielectric.com/ldg/ibim/.
  Access the site, and enter the region and the outdoor unit model (not the indoor unit model) to be connected to see the document.
  The indoor units not listed in the separate document “Additional refrigerant charge” must be charged with the additional amount of refrigerant shown in Table Ⓑ.
* Contact your dealer for the amount of refrigerant to be added when connecting CMB-P**-V-G1, CMB-P**-V-GA1, CMB-P**-V-HA1, CMB-P**-V-GB1, or CMB-P**-V-HB1.
* When connecting LEV kit (PAC-LV11M-J), additional refrigerant charge may be required. Refer to the installation manual of the LEV kit.

• When the piping length from the outdoor unit to the farthest indoor unit is longer than 30.5 m (100 ft)

Amount of additional charge (oz)	=	High-pressure pipe ø1-3/8 total length × 5.60 (oz/ft)	+	High-pressure pipe ø1-1/8 total length × 3.54 (oz/ft)	+	High-pressure pipe ø7/8 total length × 2.26 (oz/ft)	+	High-pressure pipe ø3/4 total length × 1.51 (oz/ft)	+	High-pressure pipe ø5/8 total length × 1.08 (oz/ft)
	+	Liquid pipe ø3/4 total length × 2.80 (oz/ft)	+	Liquid pipe ø5/8 total length × 1.94 (oz/ft)	+	Liquid pipe ø1/2 total length × 1.19 (oz/ft)	+	Liquid pipe ø3/8 total length × 0.59 (oz/ft)	+	Liquid pipe ø1/4 total length × 0.23 (oz/ft)

+

Main or sub BC controller	Amount (oz/unit)
J(1)-type	53
JA(1)-type	106
KA(1)-type	166
KB(1)-type	15

+

Total capacity of connected indoor units	Amount (oz) (to be added for indoor unit)
80 or below	71
81 to 160	89
161 to 330	106
331 to 390	124
391 to 480	159
481 to 630	177
631 to 710	212
711 to 800	283
801 to 890	318
891 to 1070	353
1071 to 1250	424
1251 or above	494

* When the piping length from the outdoor unit to the farthest indoor unit is longer than 30.5 m (100 ft), additional refrigerant charge shown in "Additional refrigerant charge" is not necessary.
* Contact your dealer for the amount of refrigerant to be added when connecting CMB-P**-V-G1, CMB-P**-V-GA1, CMB-P**-V-HA1, CMB-P**-V-GB1, or CMB-P**-V-HB1.
* When connecting LEV kit (PAC-LV11M-J), additional refrigerant charge may be required. Refer to the installation manual of the LEV kit.

<Example>
Outdoor unit 1 model: EP300YNW
Outdoor unit 2 model: EP300YNW
BC controller (Main) model: CMB-M108V-JA1
BC controller (Sub) model: CMB-M104V-KB1 × 4 units
Total capacity of connected indoor units: 530

* Refer to the pipe connection examples in section 9-4 for the pipes marked with the letters below.

A: ø1-1/8; 131 ft
B: ø3/8; 32 ft
C: ø3/8; 16 ft
D: ø3/8; 16 ft
E: ø3/8; 16 ft
F: ø3/8; 16 ft
G: ø3/8; 16 ft
H: ø3/8; 16 ft
J: ø3/8; 16 ft

A_1: ø3/4; 9 ft
A_2: ø3/4; 3 ft
a: ø3/8; 32 ft
b: ø3/8; 16 ft
c: ø1/4; 16 ft
d: ø1/4; 32 ft
e: ø1/4; 16 ft
f: ø3/8; 16 ft
g: ø3/8; 16 ft
h: ø3/8; 16 ft

The total length of the high-pressure piping and liquid piping in each case is as follows:
ø1-1/8 total length: 131 (A)
ø3/4 total length: 9 (A_1) + 3 (A_2) = 12
ø3/8 total length: 32 (B) + 16 (C) + 16 (D) + 16 (E) + 16 (F) + 16 (G) + 16 (H) + 16 (J) + 32 (a) + 16 (b) + 16 (f) + 16 (g) + 16 (h) = 240
ø1/4 total length: 16 (c) + 32 (d) + 16 (e) = 64

Therefore, when the piping length from the outdoor unit to the farthest indoor unit is longer than 30.5 m (100 ft),
Amount of additional charge = (131 × 3.54) + (12 × 1.51) + (240 × 0.59) + (64 × 0.23) + 106 + (15 × 4) + 177
= 981.2 oz (Fractions are rounded up.)

9-9-2. Charging additional refrigerant

Charge the calculated amount of refrigerant in the liquid state to the unit through the service port after the completion of piping work. Upon completion of all work, securely tighten all service port caps and shaft caps to prevent refrigerant leakage.

<Notice>

- Do not vent the refrigerant into the atmosphere.
- Refer to the table below for the appropriate tightening torque.

Pipe size [mm (in)]	Shaft cap (N·m)	Service port cap (N·m)
ø9.52 (ø3/8)	22.5	12
ø12.7 (ø1/2)	27.5	
ø15.88 (ø5/8)	32.5	
ø22.2 (ø7/8)	22	16
ø28.58 (ø1-1/8)		

- If the refrigerant tank does not have a siphon pipe, charge the liquid refrigerant with the tank upside-down as shown in the figure below.

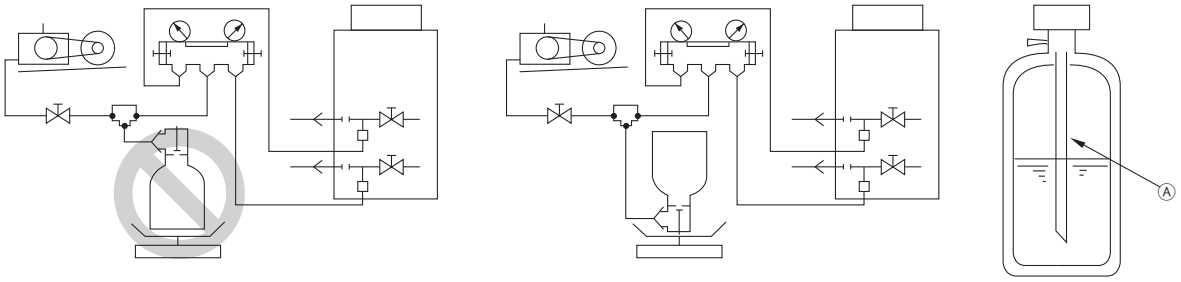

Ⓐ Siphon pipe

- After evacuation and refrigerant charging, ensure that the service valves are fully open. Do not operate the unit with the service valves closed.

10. Electrical work

WARNING

Electrical work must be performed by qualified personnel in accordance with local regulations and the instructions provided in this manual. Only use the specified cables and dedicated circuits.

- Inadequate power source capacity or improper electrical work will result in electric shock, malfunction, or fire.

Proper grounding must be provided by qualified personnel.

- Improper grounding may result in electric shock, fire, explosion, or malfunction due to electrical noise. Do not connect the ground wire to gas or water pipes, lightning rods, or telephone ground wires.

en

10-1. Before electrical work

- When performing electrical work, refer to the indoor unit or controller installation manuals as well.
- Bear in mind ambient conditions (ambient temperature, direct sunlight, rain water, etc.) when proceeding with the wiring and connections.
- When opening or closing the front panel of the control box, do not let it come into contact with any of the internal components.
- Specific wiring requirements should adhere to the wiring regulations of the region.
- Include some slack in the wiring for the control box on the indoor and outdoor units, because these boxes are sometimes removed at the time of service work.

10-2. Power cables and device capacity

WARNING

Include some slack in the power cables.

- Failure to do so may break or overheat the cables, resulting in smoke or fire.

Install an earth leakage breaker on the power supply of each unit.

- Failure to do so may result in electric shock or fire.

Only use properly rated breakers (an earth leakage breaker, local switch <a switch + fuse that meets local electrical codes>, or overcurrent breaker).

- Failure to do so may result in electric shock, malfunction, smoke, or fire.

Only use standard power cables of sufficient capacity.

- Failure to do so may result in current leakage, overheating, smoke, or fire.

Tighten all terminal screws to the specified torque.

- Loose screws and contact failure may result in smoke or fire.

CAUTION

If a large electric current flows due to a malfunction or faulty wiring, earth leakage breakers on the unit side and on the upstream side of the power supply system could both operate. Depending on the importance of the system, separate the power supply system or take protective coordination of breakers.

• Wiring example

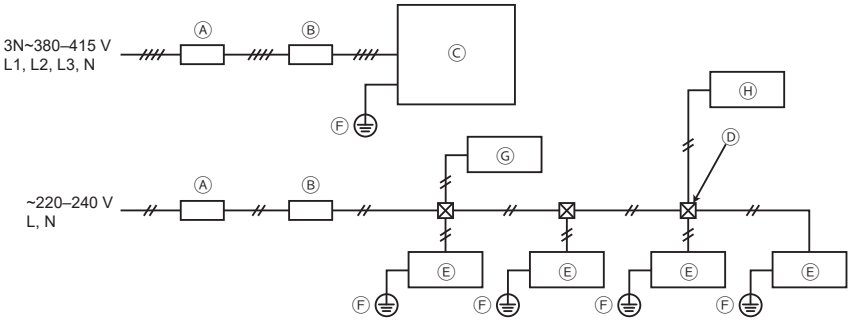

Ⓐ Earth leakage breaker
Ⓑ Local switch with fuse
Ⓒ Outdoor unit
Ⓓ Pull box
Ⓔ Indoor unit
Ⓕ Earth
Ⓖ Main BC controller
Ⓗ In an R2 system: Sub BC controller
In a Hybrid City Multi system:
sub HBC controller

• An earth leakage breaker, local switch, and overcurrent breaker should be selected according to the unit capacity (leakage current limit, breaking current, etc.).
• Select the type of breaker for an inverter circuit as an earth leakage breaker. (Mitsubishi Electric NV-S series or its equivalent)
• When an earth leakage breaker without an overcurrent protection function is used, a local switch with a fuse or an overcurrent breaker should be used in combination.
• Use a local switch with at least 3 mm (1/8 in) contact separation in each pole.
• Be sure to connect the power cable to the correct phase terminals.
• If the power cable is damaged, it must be replaced by qualified personnel in order to avoid a hazard.
• Use dedicated power cables for the outdoor unit and indoor unit. Ensure OC and OS are wired individually.
• The local standards and/or regulations is applicable at a higher priority.

		Minimum size [mm² (AWG)]			Earth leakage breaker	Local switch (A)		Overcurrent breaker (NFB) (A)	Maximum allowable system impedance
		Power cable	Power cable after branching point	Earth wire		Capacity	Fuse		
Outdoor unit	P200	4.0 (12)	–	4.0 (12)	30 A 100 mA 0.1 sec. or less	25	25	30	*1
	P250	4.0 (12)	–	4.0 (12)	30 A 100 mA 0.1 sec. or less	32	32	30	*1
	P300	4.0 (12)	–	4.0 (12)	30 A 100 mA 0.1 sec. or less	32	32	30	*1
	P350	6.0 (10)	–	6.0 (10)	40 A 100 mA 0.1 sec. or less	40	40	40	0.26 Ω
	P400	10.0 (8)	–	10.0 (8)	60 A 100 mA 0.1 sec. or less	63	63	60	0.20 Ω
	P450	10.0 (8)	–	10.0 (8)	60 A 100 mA 0.1 sec. or less	63	63	60	0.18 Ω
	P500	10.0 (8)	–	10.0 (8)	60 A 100 mA 0.1 sec. or less	63	63	60	0.16 Ω
	P550	10.0 (8)	–	10.0 (8)	60 A 100 mA 0.1 sec. or less	63	63	60	0.14 Ω

		Minimum size [mm² (AWG)]			Earth leakage breaker	Local switch (A)		Overcurrent breaker (NFB) (A)	Maximum allowable system impedance
		Power cable	Power cable after branching point	Earth wire		Capacity	Fuse		
Outdoor unit	EP200	4.0 (12)	–	4.0 (12)	30 A 100 mA 0.1 sec. or less	25	25	30	*1
	EP250	4.0 (12)	–	4.0 (12)	30 A 100 mA 0.1 sec. or less	32	32	30	*1
	EP300	4.0 (12)	–	4.0 (12)	30 A 100 mA 0.1 sec. or less	32	32	30	*1
	EP350	6.0 (10)	–	6.0 (10)	40 A 100 mA 0.1 sec. or less	40	40	40	*1
	EP400	10.0 (8)	–	10.0 (8)	60 A 100 mA 0.1 sec. or less	63	63	60	0.21 Ω
	EP450	10.0 (8)	–	10.0 (8)	60 A 100 mA 0.1 sec. or less	63	63	60	0.19 Ω
	EP500	10.0 (8)	–	10.0 (8)	60 A 100 mA 0.1 sec. or less	63	63	60	0.17 Ω
	EP550	10.0 (8)	–	10.0 (8)	60 A 100 mA 0.1 sec. or less	63	63	60	0.14 Ω

* Refer to the indoor unit installation manual and instruction book for details about cable size and breaker capacity on the indoor unit.
*1 Meets technical requirements of IEC 61000-3-3.

- The wire size is the minimum value for metal conduit wiring. If the voltage drops, use a wire that is one size thicker in diameter. Make sure the power-supply voltage does not drop more than 10%. Make sure that the voltage imbalance between the phases is 2% or less.
- Power supply cords of parts of appliances for outdoor use shall not be lighter than polychloroprene sheathed flexible cord (design 60245 IEC57). For example, use wiring such as YZW.
- This unit is intended for the connection to a power supply system with a maximum permissible system impedance shown in the above table at the interface point (power service box) of the user's supply.
- The user must ensure that this unit is connected only to a power supply system which fulfils the requirement above.
  If necessary, the user can ask the public power supply company for the system impedance at the interface point.
- This unit complies with IEC 61000-3-12 provided that the short-circuit power Ssc is greater than or equal to Ssc*1 at the interface point between the user's supply and the public system. It is the responsibility of the installer or user of the equipment to ensure, by consultation with the distribution network operator if necessary, that the equipment is connected only to a supply with a short-circuit power Ssc greater than or equal to Ssc*1.

*1 Ssc

Model	Ssc (MVA)
P200	1.25
P250	1.66
P300	1.82
P350	2.14
P400	2.72
P450	3.03
P500	3.35
P550	3.99

Model	Ssc (MVA)
EP200	1.25
EP250	1.58
EP300	1.73
EP350	1.93
EP400	2.59
EP450	2.90
EP500	3.13
EP550	3.97

10-3. Control cable specifications

- Transmission cable

Type	2-core shielded cable CVVS, CPEVS, or MVVS
Size	1.25 mm² (AWG 16), or ø1.2 mm or above
Length	Max. 200 m (656 ft)
Remarks	The maximum allowable length of transmission cables via outdoor units (both centralized control transmission cables and indoor-outdoor transmission cables) is 500 m (1640 ft)*1. The maximum allowable length of transmission cables from the power supply unit to each outdoor unit or to the system controller is 200 m (656 ft).

* Do not use a single multiple-core cable to connect indoor units that belong to different refrigerant systems. The use of a multiple-core cable may result in signal transmission errors and malfunctions.
* Ensure shield continuity when extending the transmission cable.
*1 When extending the length of the transmission cables to 1000 m (3280 ft), consult your dealer.

- Remote controller cable

	MA remote controller	ME remote controller
Type	2-core cable VCTF, VCTFK, CVV, VVR, VVF, or VCT	2-core shielded cable CVVS, CPEVS, or MVVS
Size	0.3 to 1.25 mm² (AWG 22 to 16) *1 *3	0.3 to 1.25 mm² (AWG 22 to 16) *1
Length	Max. 200 m (656 ft) *2	See section 10-4 (1).

*1 The use of cables that are smaller than 0.75 mm² (AWG 18) is recommended for easy handling.
*2 Max. 70 m (229 ft) for PAR-CT01MAA
*3 To wire PAR-CT01MA, PAR-4XMAA, PAR-3XMAA ("X" represents 0 or later), or Simple MA remote controller, use a cable with a diameter of 0.3 mm² (AWG 22).

10-4. System configuration

• Unit code and the maximum number of connectable units

Unit type		Code	Number of connectable units
Outdoor unit	Main unit	OC	–
	Sub unit	OS	–
Indoor unit		IC	1 to 50 units per OC (depends on the unit model)
BC controller	Main	BC	1 unit per OC
	Sub	BS	0 to 11 units per OC
HBC controller	Main	HB	1 to 2 units per OC
	Sub	HS	0 to 2 units per OC
Remote controller		RC	0 to 2 units per group
Transmission booster unit		RP	0 to 2 units per OC

* A transmission booster may be required depending on the number of connected indoor units and sub BC controllers.
* The outdoor units in the same refrigerant circuit are automatically designated as OC and OS. The outdoor units are designated as OC and OS in the order of capacity from large to small (if two or more units have the same capacity, in the order of address from small to large).

• System configuration example

* The numbers in the parentheses in the figures below indicate address numbers.

(1) When ME remote controllers are connected

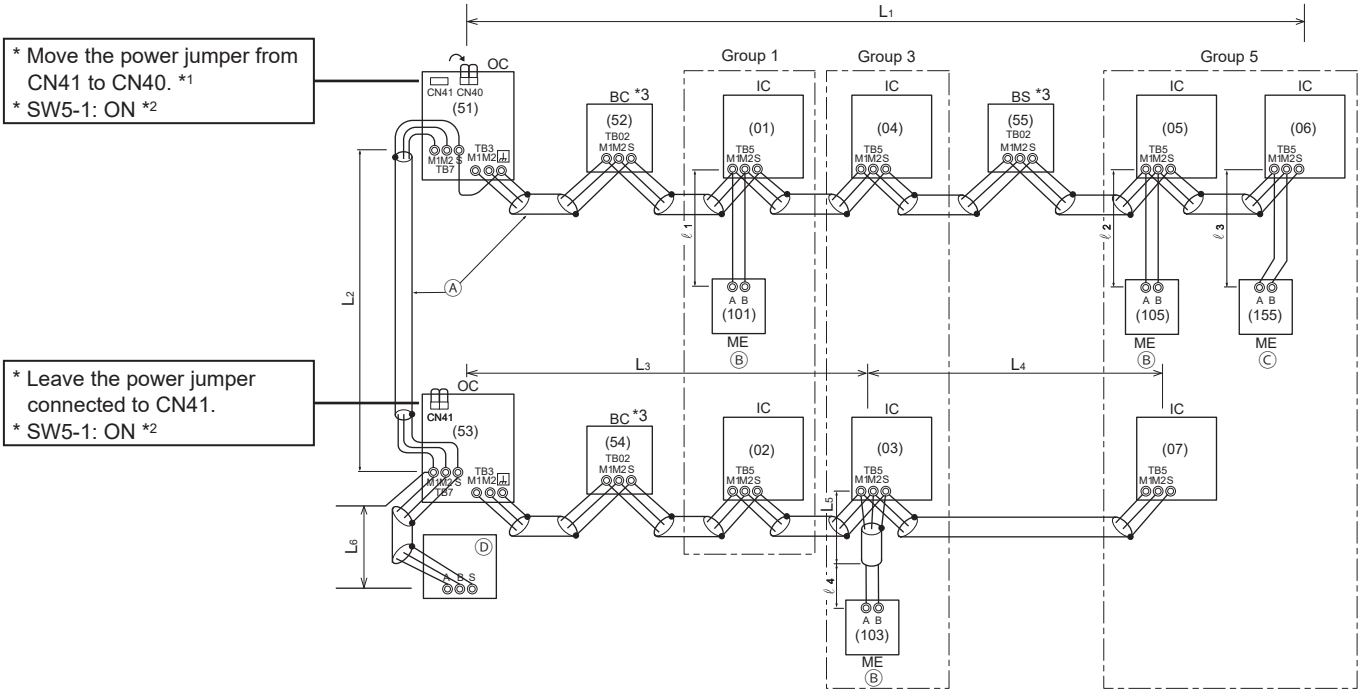

Ⓐ Shielded cable
Ⓑ Main remote controller
Ⓒ Sub remote controller
Ⓓ System controller

*1 When a power supply unit is not connected to the centralized control transmission cable, move the power jumper from CN41 to CN40 on only one of the outdoor units.
*2 If a system controller is used, set SW5-1 on ALL of the outdoor units to ON.
*3 In an R2 system: BC, BS
In a Hybrid City Multi system: HB, HS

Maximum allowable length of control cables

Transmission cables via outdoor units	$L_1 + L_2 + L_3 + L_4$, $L_1 + L_2 + L_3 + L_5$, $L_1 + L_2 + L_6 \leq 500$ m (1640 ft)*4
Transmission cables	L_1, $L_3 + L_4$, $L_3 + L_5$, L_6, $L_2 + L_6 \leq 200$ m (656 ft)
Remote controller cables	ℓ_1, ℓ_2, ℓ_3, $\ell_4 \leq 10$ m (32 ft) * If the length exceeds 10 m (32 ft), the length that exceeds 10 m (32 ft) needs to be included in the maximum allowable length of transmission cables above.

*4 When extending the length of the transmission cables to 1000 m (3280 ft), consult your dealer.

(2) When MA remote controllers are connected

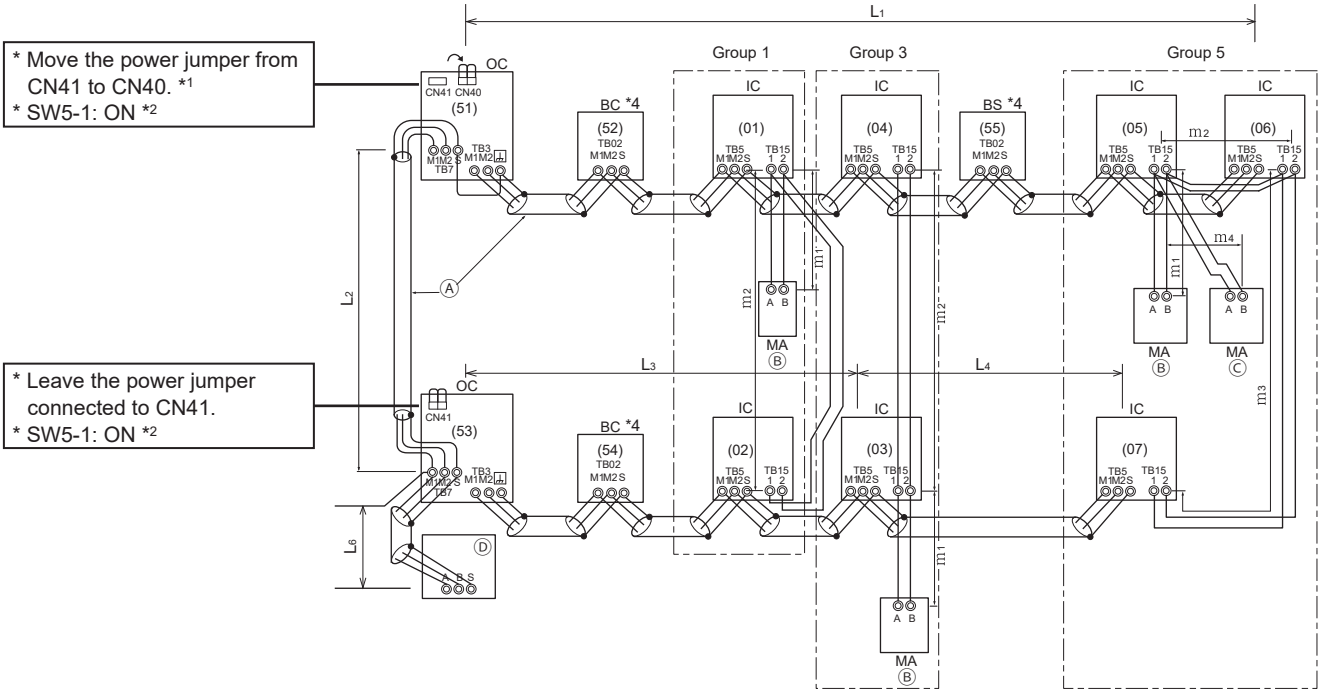

Ⓐ Shielded cable
Ⓑ Main remote controller
Ⓒ Sub remote controller
Ⓓ System controller

*1 When a power supply unit is not connected to the centralized control transmission cable, move the power jumper from CN41 to CN40 on only one of the outdoor units.
*2 If a system controller is used, set SW5-1 on ALL of the outdoor units to ON.
*3 When a PAR-CT01MA, PAR-4XMAA, or PAR-3XMAA ("X" represents 0 or later) is connected to a group, no other MA remote controllers can be connected to the same group.
*4 In an R2 system: BC, BS
In a Hybrid City Multi system: HB, HS

Maximum allowable length of control cables

Transmission cables via outdoor units	$L_1 + L_2 + L_3 + L_4$, $L_1 + L_2 + L_6 \leq 500$ m (1640 ft)*5
Transmission cables	L_1, $L_3 + L_4$, L_6, $L_2 + L_6 \leq 200$ m (656 ft)
Remote controller cables	$m_1 + m_2$, $m_1 + m_2 + m_3 + m_4 \leq 200$ m (656 ft)

*5 When extending the length of the transmission cables to 1000 m (3280 ft), consult your dealer.

en

(3) When a transmission booster unit is connected

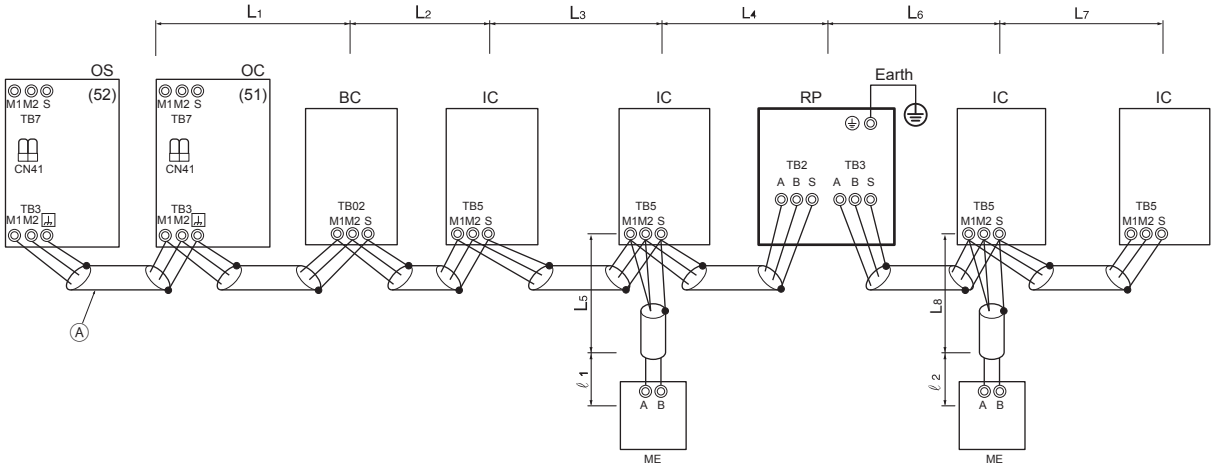

Ⓐ Shielded cable

*1 Daisy-chain terminals (TB3) on outdoor units together in the same refrigerant system.
*2 Leave the power jumper connected to CN41. When connecting a system controller to the transmission line (TB7) for centralized control, refer to (1), (2), or DATA BOOK.

Maximum allowable length of control cables

Transmission cables	$L_1 + L_2 + L_3 + L_4 + L_6 + L_7$, $L_1 + L_2 + L_3 + L_4 + L_6 + L_8$, $L_1 + L_2 + L_3 + L_5$, $L_7 + L_6 + L_4 + L_5$, $L_5 + L_4 + L_6 + L_8 \leq 200$ m (656 ft)
Remote controller cables	ℓ_1, $\ell_2 \leq 10$ m (32 ft) * If the length exceeds 10 m (32 ft), the length that exceeds 10 m (32 ft) needs to be included in the maximum allowable length of transmission cables above.

10-5. Wiring connections in the control box

WARNING

Connections must be made securely and without tension on the terminals.

- Improperly connected cables may break, overheat, or cause smoke or fire.

10-5-1. Threading power cable through the knockout hole

- Open the front panel when performing wiring work.
- Punch out the knockout holes at the bottom of the front panel or base with a hammer. Use the appropriate knockout hole according to the size of the power cable, referring to the tables below.

[1] (E)P200 to 300

(1) When routing the wiring through the front of the unit

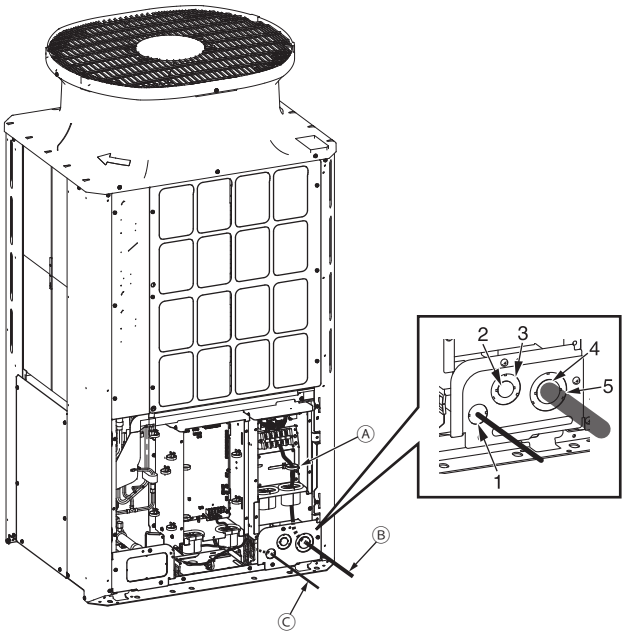

(2) When routing the wiring through the bottom of the unit

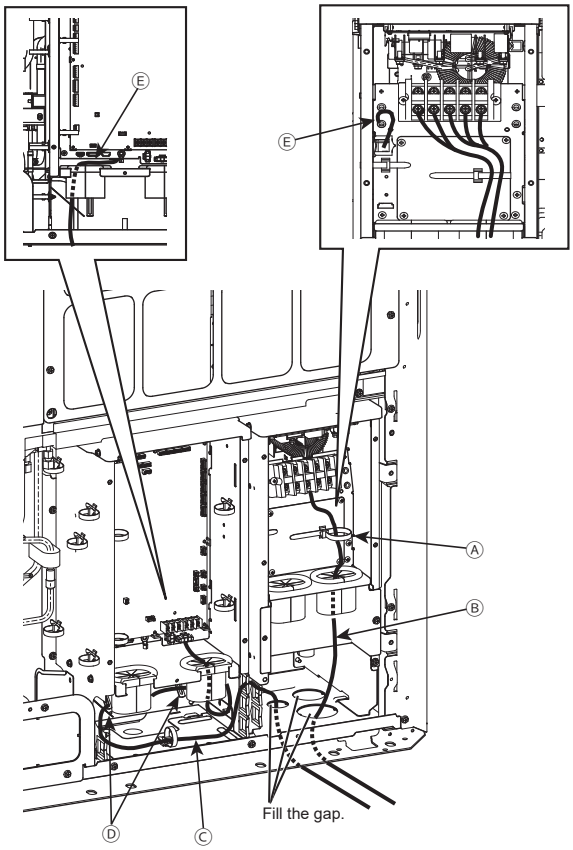

Power cable size (mm²)	Knockout hole to be used
2, 3.5, 5.5	Knockout hole 2
8, 14	Knockout hole 4
21, 26, 33	Knockout hole 3
84, 67, 53	Knockout hole 5

Ⓐ Cable strap
Ⓑ Power cable
Ⓒ Transmission cable
The length of the section after the cable access hole must be at least 1100 mm (43 in).
Ⓓ Clamp
Ⓔ Ground wire that connects Main Box and Inverter Box

[2] (E)P350 to 500

(1) When routing the wiring through the front of the unit

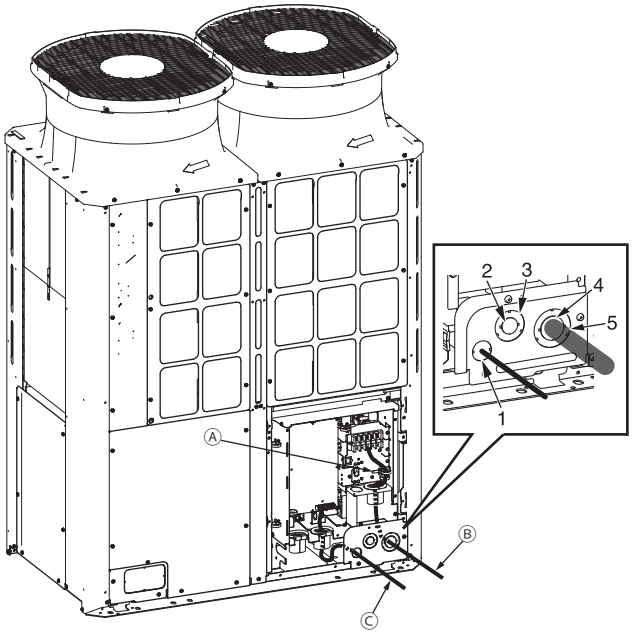

(2) When routing the wiring through the bottom of the unit

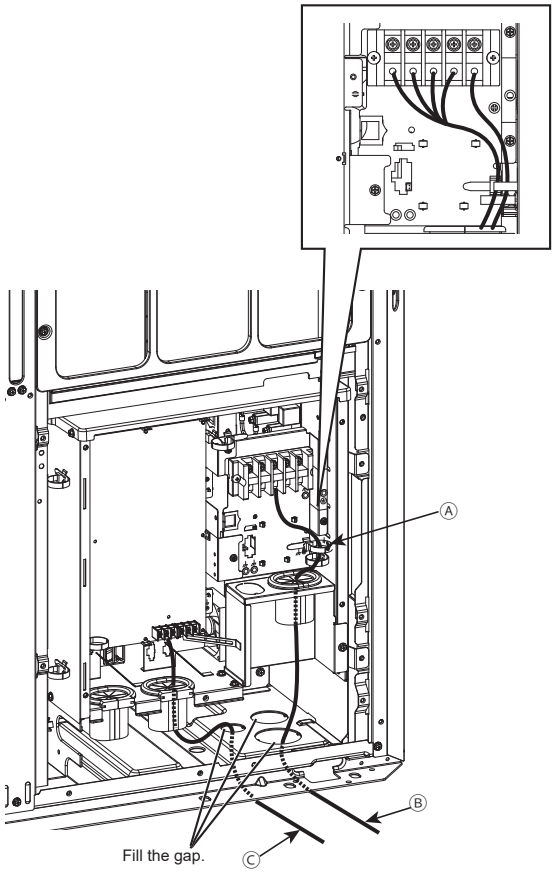

Power cable size (mm²)	Knockout hole to be used
2, 3.5, 5.5	Knockout hole 2
8, 14	Knockout hole 4
21, 26, 33	Knockout hole 3
84, 67, 53	Knockout hole 5

Ⓐ Cable strap
Ⓑ Power cable
Ⓒ Transmission cable
The length of the section after the cable access hole must be at least 1100 mm (43 in).

<Notice>

- Do not remove the ground wire that connects Main Box and Inverter Box.
- Install the transmission cable as shown in the figures above so that the cable is long enough for the Main Box to be moved for servicing.
- If there are any gaps around the power cable and transmission cable, please be sure to fill these in with a suitable material to prevent snow from entering, which may cause damage to the electrical parts, and to protect your hands from direct contact with cables.
- When putting the power cable through the knockout hole without using a conduit tube, deburr the hole and protect the power cable with protective tape.
- Use a conduit tube to narrow down the opening if there is a possibility of small animals entering the unit.
- When taking the conduit tube out from the bottom part of the unit, caulk around the tube opening to prevent water infiltration.

10-5-2. Fixing the cables in place

Route the cables as shown in the figures below.

- (E)P200 to 300

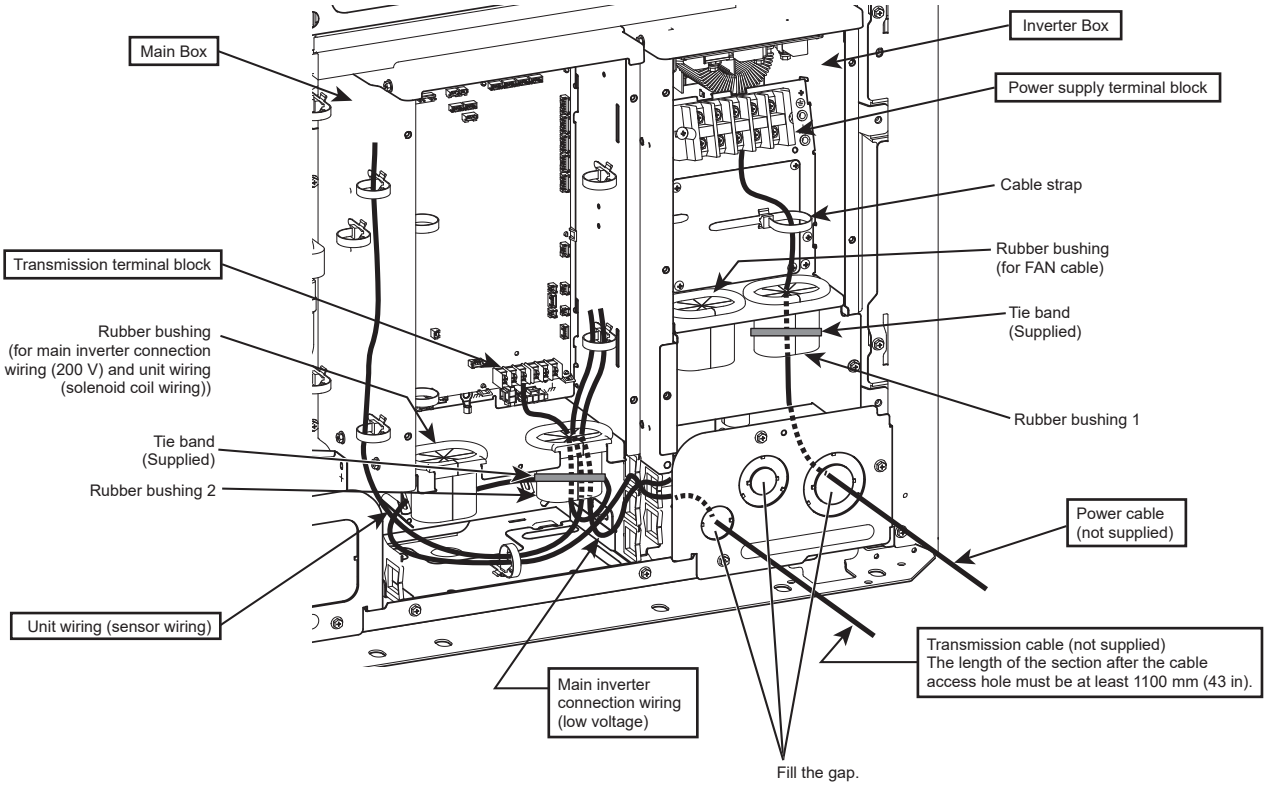

- (E)P350 to 550

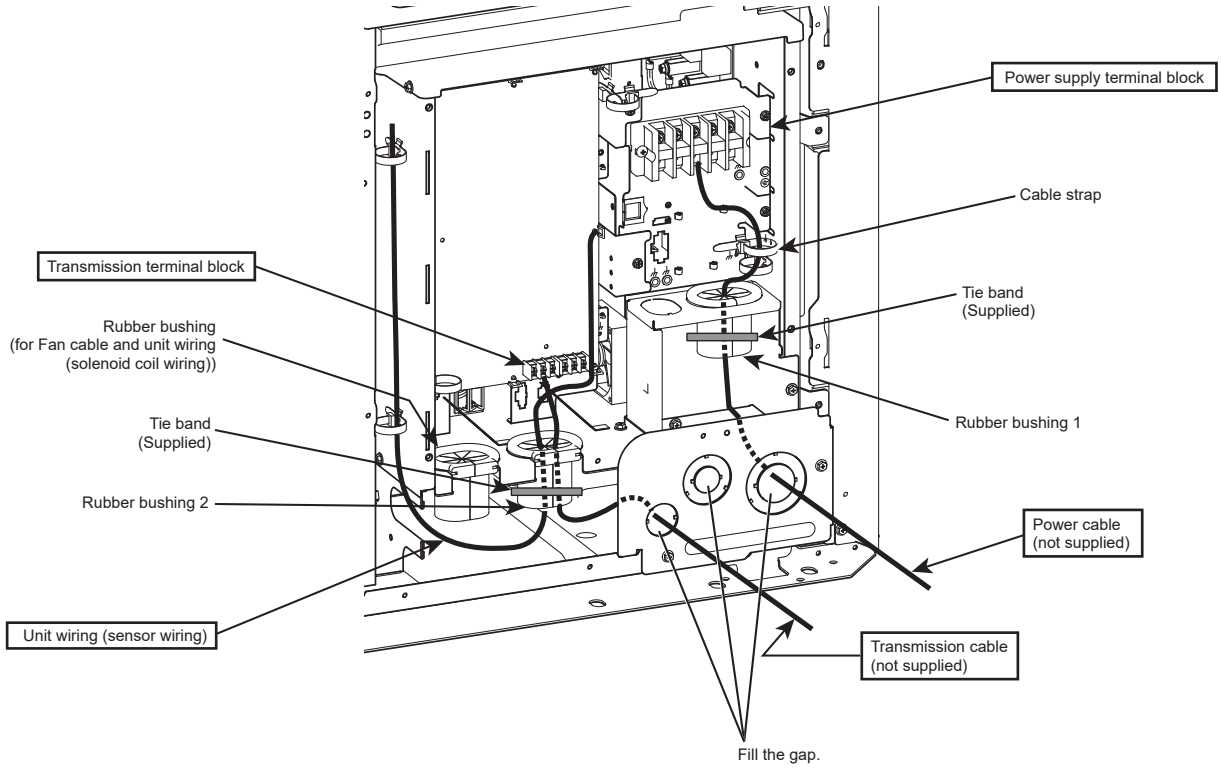

Take the procedure below.

① Thread the power cable through the rubber bushing 1. (See *1 and *2 below.)
② Thread the unit wiring (sensor wiring) and the transmission cable through the rubber bushing 2. (See *1 and *2 below.)
③ Hold the power cable and the transmission cable in place respectively with the cable straps.
④ Secure each rubber bushing with the supplied tie band. (See *3 below.)

*1 Make sure the cables are not coming out of the rubber bushing cut.

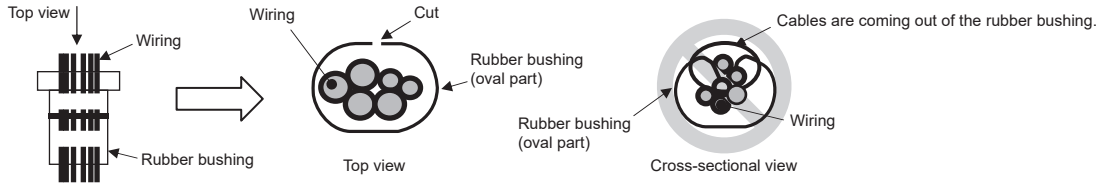

*2 When threading the wiring through the rubber bushing, make sure the rubber bushing will not come off the sheet metal on the control box.

*3 When tying the supplied tie band around the rubber bushing, make sure to leave no gap between the ends.

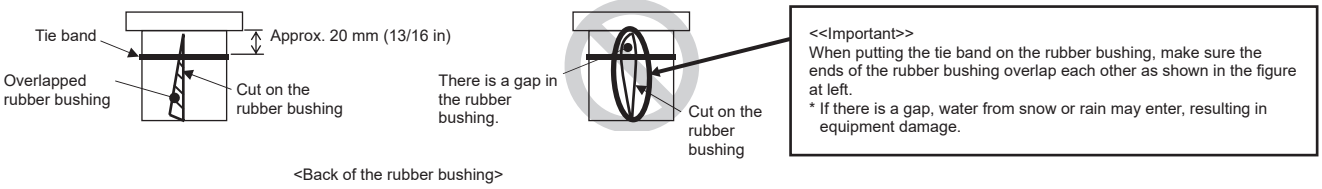

10-5-3. Connecting the cables

(E)P200 to 300

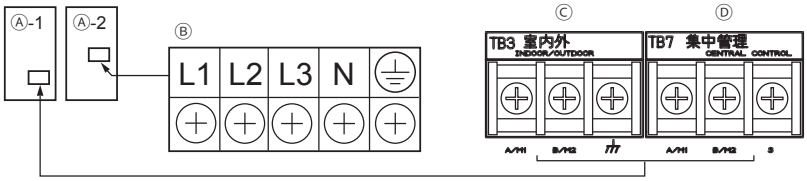

(E)P350 to 550

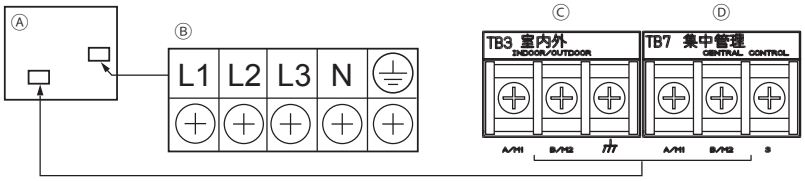

Ⓐ Control box
Ⓑ Power supply terminal block (TB1)
Ⓒ Terminal block for indoor-outdoor transmission cable (TB3)
Ⓓ Terminal block for centralized control transmission cable (TB7)

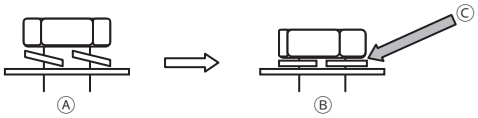

Ⓐ Terminal block with loose screws
Ⓑ Properly installed terminal block
Ⓒ Spring washers must be parallel to the terminal block.

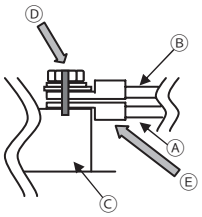

Ⓐ Power cables, transmission cables
Ⓑ Daisy-chain (transmission cables only)
Ⓒ Terminal blocks (TB1, TB3, TB7)
Ⓓ Make an alignment mark.
Ⓔ Install the ring terminals back to back.

<Notice>

- Connect the cables respectively to the power supply terminal block and the transmission terminal block. Erroneous connection does not allow the system to operate.
- Never connect the power cable to the transmission terminal block. If connected, electrical parts will be damaged.
- Transmission cables should be (5 cm (2 in) or more) apart from the power cable so that it is not influenced by electric noise from the power cable. (Do not put the transmission cables and the power cable in the same conduit.)
- Follow the tightening torque for each screw type as shown below. Be careful not to use excessive torque as this could damage the screw.
  Terminal block (TB1 (M6 screw)): 2.75 [N·m]
  Terminal block (TB3, TB7 (M3.5 screw)): 0.82 [N·m]
- When tightening the screws, do not push the driver strongly to avoid damaging the screw.
- Make an alignment mark with a permanent marker across the screw head, washer, and terminal after tightening the screws.

Take the procedure below to connect the cables.

① Connect the indoor-outdoor transmission cable to TB3.
If multiple outdoor units are connected to the same refrigerant system, daisy-chain TB3 (M1, M2, earth) on the outdoor units. The indoor-outdoor transmission cable to the indoor unit should be connected to TB3 (M1, M2, earth) of only one of the outdoor units. Connect the shield to the earth terminal.

② Connect the centralized control transmission cables (between the centralized control system and the outdoor units of different refrigerant systems) to TB7.
If multiple outdoor units are connected to the same refrigerant system, daisy-chain TB7 (M1, M2, S) on all outdoor units.*1 Connect the shield to the S terminal.

*1 If TB7 on the outdoor units in the same refrigerant system are not daisy-chained, connect the centralized control transmission cable to TB7 on the OC. If the OC is out of order, or if centralized control is being conducted during a power supply shut-off, daisy-chain TB7 on the OC and OS. (In the case that the outdoor unit whose power jumper CN41 on the control board has been replaced with CN40 is out of order or the power is shut-off, centralized control will not be conducted even when TB7 is daisy-chained.)

③ When a power supply unit is not connected to the centralized control transmission cable, move the power jumper from CN41 to CN40 on only one of the outdoor units.

④ On the outdoor unit whose power jumper was moved from CN41 to CN40, short circuit the S terminal and the earth terminal.

⑤ Connect terminals M1 and M2 of the transmission terminal block on the indoor unit that has the lowest address in the group to the terminal block on the remote controller.
⑥ When a system controller is connected, set SW5-1 on all outdoor units to ON.
⑦ Fix the cables securely in place with the cable strap below the terminal block.

10-6. Address setting

• Set the address setting switch as follows.

		Address setting method	Address
Indoor unit (Main, Sub)		Assign the lowest address to the main indoor unit in the group, and assign sequential addresses to the rest of the indoor units in the same group. * In an R2 system with a sub BC controller or in a Hybrid City Multi system with a sub HBC controller, make the settings for the indoor units in the following order. (Set the addresses so that the addresses of ① are smaller than those of ②, and the addresses of ② are smaller than those of ③.) ① Indoor units that are connected to the main BC controller or main HBC controller ② Indoor units that are connected to sub BC controller 1 or sub HBC controller ③ Indoor units that are connected to sub BC controller 2 or sub HBC controller	01 to 50
Outdoor unit (OC, OS)		Assign sequential addresses to the outdoor units in the same refrigerant system. * To set the address to 100, the address setting switch must be set to 50.	51 to 100
BC controller HBC controller	Main	Assign an address that equals the address of the outdoor unit plus 1. If the address that is assigned to the main BC controller or the main HBC controller overlaps any of the addresses that are assigned to the outdoor units or to the sub BC controller or the sub HBC controller, use a different, unused address within the setting range. * To set the address to 100, the address setting switch must be set to 50.	51 to 100
	Sub	Assign an address that equals the lowest address of the indoor units that are connected to the sub BC controller or the sub HBC controller plus 50. * To set the address to 100, the address setting switch must be set to 50.	51 to 100
ME remote controller	Main	Assign an address that equals the address of the main indoor unit in the group plus 100.	101 to 150
	Sub	Assign an address that equals the address of the main indoor unit in the group plus 150.	151 to 200
MA remote controller		Address setting is not required. (The Main/Sub setting is required.)	–

* The outdoor units in the same refrigerant circuit are automatically designated as OC and OS. The outdoor units are designated as OC and OS in the order of capacity from large to small (if two units have the same capacity, in the order of address from small to large).
* Make indoor unit group settings from remote controllers after turning on the power to all units.

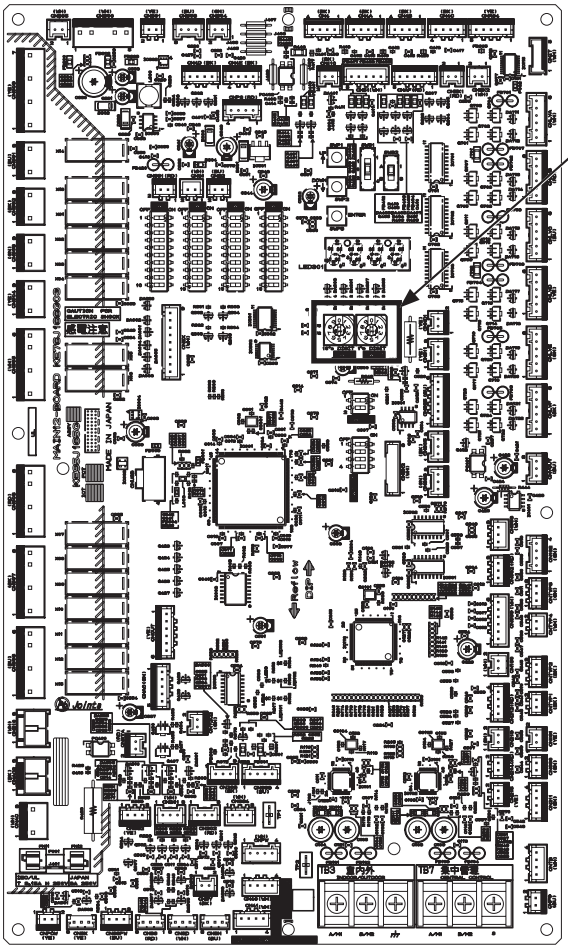

11. Test run

11-1. Before a test run

CAUTION

After the wiring work has been completed, measure the insulation resistance, and make sure that it reads at least 1 MΩ.

- Failure to do so may result in electric leakage, malfunction, or fire.

Turn on the power at least 12 hours before starting operation. Keep the power turned on throughout the operating season.

- Insufficient energizing will result in malfunction.

en

- Before performing a test run, turn off the power to the outdoor unit, and disconnect the power cable from the power supply terminal block to measure the insulation resistance.
- Measure the insulation resistance between the power supply terminal block and the earth with a 500 V ohmmeter, and make sure it is at least 1 MΩ.
- If the insulation resistance is 1 MΩ or above, connect the power cable to the power supply terminal, and turn on the power at least 12 hours before starting operation. If the insulation resistance is below 1 MΩ, do not operate the unit, and check the compressor for a earth fault.
- While the unit is turned on, the compressor will remain energized even when it is stopped.
- The insulation resistance between the power supply terminal block and the earth may drop to near 1 MΩ immediately after installation or when the main power to the unit has been turned off for a long time because of the stagnation of refrigerant in the compressor.
- By turning on the main power and energizing the unit for 12 hours or longer, the refrigerant in the compressor will evaporate and the insulation resistance will rise.
- Do not apply an ohmmeter voltage to the terminal block for transmission cables. Doing so will damage the control board.
- Do not measure the insulation resistance of the transmission terminal block of the unit remote controller.
- Check for refrigerant leakage and for loose power cables and transmission cables.
- Check that the high-pressure side and low-pressure side service valves are fully open. Tighten the valve caps.
- Check the phase order of the power supply and the interphase voltage. If the voltage is out of the ±10% range, or if the voltage imbalance is more than 2%, discuss the countermeasure with the customer.
- When a transmission booster unit is connected, turn on the transmission booster unit before turning on the outdoor unit. If the outdoor unit is turned on first, the refrigerant circuit connection information will not be properly verified. If the outdoor unit is turned on first, turn on the transmission booster unit and then power reset the outdoor unit.
- When a power supply unit is connected to the centralized control transmission cable, or when power is supplied from a system controller with a power-supply function, perform a test run with the power supply unit being energized. Leave the power jumper connected to CN41.
- When power is turned on or after power recovery, performance may degrade for approximately 30 minutes.

11-2. Function setting

Make function settings by setting the dipswitches SW4, SW6, and SWP3 on the main board.
Write down the switch settings on the electrical wiring diagram label on the control box front panel for future reference when the control box needs to be replaced.

- Take the following steps to make temperature unit (ºC or ºF) settings.
  ① Set the 10th bit of SW6 to ON.
  ② Set SW4 as shown in the table below to select the setting item No.921. (The setting item No. will be displayed on LED1.)
  ③ Press SWP3 for two seconds or longer to change the settings. (The settings can be checked on LED3.)

	Setting item No.	SW4 0: OFF, 1: ON *1										Setting (LED3 display) *2	
		1	2	3	4	5	6	7	8	9	10	Unlit	Lit
Temperature unit setting	921	1	0	0	1	1	0	0	1	1	1	ºC	ºF

*1 Make the SW4 setting after the unit is energized.
*2 This will blink while the system is starting up.

- Make various function settings by setting SW5 and SW6, referring to the table below.

	Setting content	Setting		Switch setting timing
		OFF	ON	
SW5-1	Centralized control switch	Without connection to the centralized controller	With connection to the centralized controller	Before being energized
SW5-2	Deletion of connection information	Normal control	Deletion	Before being energized
SW5-3	–	Preset before shipment		–
SW5-4	–			–
SW5-5	–			–
SW5-6	–			–
SW5-7	–			–
SW5-8	–			–

	Setting content	Setting		Switch setting timing
		OFF	ON	
SW6-1	–	–	–	–
SW6-2	–	–	–	–
SW6-3	–	–	–	–
SW6-4	High static pressure setting	Refer to *1.	Refer to *1.	Before being energized
SW6-5				
SW6-6	–	–	–	–
SW6-7	Low-noise mode selection	Performance priority	Low-noise priority	Any time after being energized
SW6-8	Selection of Low-noise or Demand	Low-noise (Night)	Demand	Before being energized
SW6-9	Selection of Diagnostic display or Function detail setting	Refer to *2.	Refer to *2.	Any time after being energized
SW6-10				

* Do not change the factory settings of SW5-3 through SW5-8.
* Unless otherwise specified, leave the switch to OFF where indicated by "–," which may be set to OFF for a reason.

*1

	SW6-5: ON	SW6-5: OFF
SW6-4: ON	80 Pa*	60 Pa*
SW6-4: OFF	30 Pa	0 Pa

* (E)P550YNW, (E)P1050, (E)P1100YSNW: invalid

*2

	SW6-10: ON	SW6-10: OFF
SW6-9: ON	LED (round type) No. 0 to 1023	LED (7seg) No. 1024 to 2047
SW6-9: OFF	Function setting No. 0 to 1023	LED (7seg) No. 0 to 1023

11-3. Operation characteristics in relation to the refrigerant charge

It is important to have a clear understanding of the characteristics of refrigerant and the operation characteristics of air conditioners before attempting to adjust the refrigerant charge in a given system.

- During cooling operation, the amount of refrigerant in the accumulator is the smallest when all indoor units are in operation.
- During heating operation, the amount of refrigerant in the accumulator is the largest when all indoor units are in operation.
- Refrigerant undercharge creates a tendency for the discharge temperature to rise.
- Changing the amount of refrigerant in the system while there is refrigerant in the accumulator has little effect on the discharge temperature.
- The higher the high pressure level, the more likely it is for the discharge temperature to rise.
- The lower the low pressure level, the more likely it is for the discharge temperature to rise.
- When the amount of refrigerant in the system is adequate, the compressor shell temperature is 10 to 60ºC (50 to 140ºF) higher than the low-pressure saturation temperature. If the temperature difference between the compressor shell temperature and low-pressure saturation temperature is 5ºC (41ºF) or less, refrigerant overcharge is suspected.

11-4. Operation check

The following symptoms are normal and do not indicate a problem.

Events	Display on remote controller	Cause	
The auto vane automatically switches air flow direction.	Normal display	The auto vane may switch over to horizontal air flow operation from vertical air flow operation in cooling mode if the vertical air flow operation has been running for one hour. At defrost in heating mode or immediately after heating start-up/shutdown, the auto vane automatically switches to horizontal air flow for a short time.	
The fan speed automatically changes during heating operation.	Normal display	The fan operates at Very Low speed when the thermostat is turned off, and automatically changes over to the preset speed according to the timer setting or refrigerant temperature when the thermostat is turned on.	
The fan stops during heating operation.	"Defrost"	The fan remains stopped during the defrost cycle.	
The fan keeps running after the unit has stopped.	No display	After the unit has stopped during heating operation, the fan operates for one minute to exhaust heat.	
At the beginning of heating operation, the fan cannot be manually set.	"Stand By"	The fan operates at Very Low speed for five minutes after heating operation starts or until the refrigerant temperature reaches 35°C (95°F), then the fan operates at Low speed for two minutes, and finally the fan operates at the preset speed.	
When the main power is turned on, the display as shown right appears on the remote controller for about five minutes.	"HO" or "PLEASE WAIT" blinks.	The system is starting up. Wait until "HO" or "PLEASE WAIT" stops blinking and goes off then try again.	
The drain pump keeps running after the unit has stopped.	No display	The drain pump remains in operation for three minutes after the unit in cooling mode has stopped. The drain pump goes into operation when drain water is detected, even when the unit is stopped.	
The indoor unit emits noise when switching from heating to cooling and vice versa.	Normal display	R2 system	This is a normal sound of the refrigerant circuit operating properly.
		Hybrid City Multi system	Some air may be left in the water circuit. Referring to the Service Handbook provided with the HBC controller, take the appropriate measures.
Immediately after startup, the indoor unit emits the sound of liquid flowing.	Normal display	Unstable flow of the heating medium produces a sound. This is temporary and does not imply a problem.	
In a short while after the outdoor unit stops, the unit makes a clicking sound.	No display	After the unit stops and before the unit performs pressure equalization, the pressure difference temporarily becomes small and the check valve may vibrate and make a sound. This is temporary and does not imply a problem.	
Drain water comes out of the outdoor unit from the bottom part of the heat exchanger.	No display	This ensures proper drainage of drain water in case the drain water freezes and remains in the outdoor unit during the heating operation at low ambient temperature.	

12. Inspection and maintenance

WARNING

Only qualified personnel must relocate or repair the unit. Do not attempt to disassemble or alter the unit.

- Failure to do so will result in refrigerant leakage, water leakage, serious injury, electric shock, or fire.

- While the unit is turned on, the compressor will remain energized even when it is stopped. Before inspecting the inside of the control box, turn off the power, keep the unit off for at least 10 minutes, and confirm that the capacitor voltage at the connector (RYPN) has dropped to 20 VDC or less. (It takes about 10 minutes to discharge electricity after the power supply is turned off.)
- Control boxes house high-voltage and high-temperature electrical parts. They may still remain energized or hot after the power is turned off.
- Perform the service after disconnecting the connectors (RYFAN1 and RYFAN2).
  (To plug or unplug connectors, check that the outdoor unit fan is not rotating and that the voltage is 20 VDC or below. The capacitor may collect a charge and cause an electric shock when the outdoor unit fan rotates in windy conditions. Refer to the wiring nameplate for details.)
  Reconnect the connectors (RYFAN1 and RYFAN2) after servicing.
- Unit components may be damaged after long use of the unit, resulting in a performance drop or the unit becoming a safety hazard. To use the unit safely and maximize its life, it is recommended that a maintenance contract with a dealer or qualified personnel be signed. If the contract is signed, service technicians will periodically inspect the unit to identify any damage at an early stage, and take appropriate measures.
- Please contact local MITSUBISHI ELECTRIC sales office for maintenance frequency and tasking recommendations.
- When the outdoor unit is installed on the waterproof sheet, the sheet may become dirty due to the copper component seeped out from the unit. In this case, installing a drain pan for centralized drainage is recommended.

13. Rating plate information

(1) P models

Model	P200YNW	P250YNW	P300YNW	P350YNW	P400YNW	P400YSNW		P450YNW
Unit combination	–	–	–	–	–	P200YNW	P200YNW	–
Refrigerant (R410A)	5.2 kg	5.2 kg	5.2 kg	8.0 kg	8.0 kg	5.2 kg	5.2 kg	10.8 kg
Allowable pressure (PS)	HP: 4.15 MPa, LP: 2.21 MPa							
Net weight	214 kg	223 kg	225 kg	269 kg	269 kg	214 kg	214 kg	289 kg

Model	P450YSNW		P500YNW	P500YSNW		P550YNW	P550YSNW	
Unit combination	P250YNW	P200YNW	–	P250YNW	P250YNW	–	P300YNW	P250YNW
Refrigerant (R410A)	5.2 kg	5.2 kg	10.8 kg	5.2 kg	5.2 kg	10.8 kg	5.2 kg	5.2 kg
Allowable pressure (PS)	HP: 4.15 MPa, LP: 2.21 MPa							
Net weight	223 kg	214 kg	335 kg	223 kg	223 kg	335 kg	225 kg	223 kg

Model	P600YSNW		P650YSNW		P700YSNW		P750YSNW	
Unit combination	P300YNW	P300YNW	P350YNW	P300YNW	P350YNW	P350YNW	P400YNW	P350YNW
Refrigerant (R410A)	5.2 kg	5.2 kg	8.0 kg	5.2 kg	8.0 kg	8.0 kg	8.0 kg	8.0 kg
Allowable pressure (PS)	HP: 4.15 MPa, LP: 2.21 MPa							
Net weight	225 kg	225 kg	269 kg	225 kg	269 kg	269 kg	269 kg	269 kg

Model	P800YSNW		P850YSNW		P900YSNW		P950YSNW	
Unit combination	P400YNW	P400YNW	P450YNW	P400YNW	P450YNW	P450YNW	P500YNW	P450YNW
Refrigerant (R410A)	8.0 kg	8.0 kg	10.8 kg	8.0 kg	10.8 kg	10.8 kg	10.8 kg	10.8 kg
Allowable pressure (PS)	HP: 4.15 MPa, LP: 2.21 MPa							
Net weight	269 kg	269 kg	289 kg	269 kg	289 kg	289 kg	335 kg	289 kg

Model	P1000YSNW		P1050YSNW		P1100YSNW	
Unit combination	P500YNW	P500YNW	P550YNW	P500YNW	P550YNW	P550YNW
Refrigerant (R410A)	10.8 kg	10.8 kg	10.8 kg	10.8 kg	10.8 kg	10.8 kg
Allowable pressure (PS)	HP: 4.15 MPa, LP: 2.21 MPa					
Net weight	335 kg	335 kg	335 kg	335 kg	335 kg	335 kg

(2) EP models

Model	EP200YNW	EP250YNW	EP300YNW	EP350YNW	EP400YNW	EP400YSNW		EP450YNW
Unit combination	–	–	–	–	–	EP200YNW	EP200YNW	–
Refrigerant (R410A)	5.2 kg	5.2 kg	5.2 kg	8.0 kg	8.0 kg	5.2 kg	5.2 kg	10.8 kg
Allowable pressure (PS)	HP: 4.15 MPa, LP: 2.21 MPa							
Net weight	219 kg	228 kg	230 kg	275 kg	276 kg	219 kg	219 kg	301 kg

Model	EP450YSNW		EP500YNW	EP500YSNW		EP550YNW	EP550YSNW	
Unit combination	EP250YNW	EP200YNW	–	EP250YNW	EP250YNW	–	EP300YNW	EP250YNW
Refrigerant (R410A)	5.2 kg	5.2 kg	10.8 kg	5.2 kg	5.2 kg	10.8 kg	5.2 kg	5.2 kg
Allowable pressure (PS)	HP: 4.15 MPa, LP: 2.21 MPa							
Net weight	228 kg	219 kg	346 kg	228 kg	228 kg	346 kg	230 kg	228 kg

Model	EP600YSNW		EP650YSNW		EP700YSNW		EP750YSNW	
Unit combination	EP300YNW	EP300YNW	EP350YNW	EP300YNW	EP350YNW	EP350YNW	EP400YNW	EP350YNW
Refrigerant (R410A)	5.2 kg	5.2 kg	8.0 kg	5.2 kg	8.0 kg	8.0 kg	8.0 kg	8.0 kg
Allowable pressure (PS)	HP: 4.15 MPa, LP: 2.21 MPa							
Net weight	230 kg	230 kg	275 kg	230 kg	275 kg	275 kg	276 kg	275 kg

Model	EP800YSNW		EP850YSNW		EP900YSNW		EP950YSNW	
Unit combination	EP400YNW	EP400YNW	EP450YNW	EP400YNW	EP450YNW	EP450YNW	EP500YNW	EP450YNW
Refrigerant (R410A)	8.0 kg	8.0 kg	10.8 kg	8.0 kg	10.8 kg	10.8 kg	10.8 kg	10.8 kg
Allowable pressure (PS)	HP: 4.15 MPa, LP: 2.21 MPa							
Net weight	276 kg	276 kg	301 kg	276 kg	301 kg	301 kg	346 kg	301 kg

Model	EP1000YSNW		EP1050YSNW		EP1100YSNW	
Unit combination	EP500YNW	EP500YNW	EP550YNW	EP500YNW	EP550YNW	EP550YNW
Refrigerant (R410A)	10.8 kg	10.8 kg	10.8 kg	10.8 kg	10.8 kg	10.8 kg
Allowable pressure (PS)	HP: 4.15 MPa, LP: 2.21 MPa					
Net weight	346 kg	346 kg	346 kg	346 kg	346 kg	346 kg

MITSUBISHI ELECTRIC

AIR CONDITIONER OUTDOOR UNIT

MODEL

REFRIGERANT	R410A kg
ALLOWABLE PRESSURE(PS)	HP 4.15MPa (41.5bar) LP 2.21MPa (22.1bar)
WEIGHT	kg
IP CODE	IP24
YEAR OF MANUFACTURE	

SERIAL No.

OPERATION		COOLING			HEATING		
RATED VOLTAGE 3N~	V	380	400	415	380	400	415
FREQUENCY	Hz	50 / 60			50 / 60		
CAPACITY	kW kcal/h Btu/h						
RATED INPUT	kW						
RATED CURRENT	A						
MAX CURRENT	A						
RATED CONDITION DB / WB	°C	INDOOR 27 / 19 OUTDOOR 35 / 24			INDOOR 20 / - OUTDOOR 7 / 6		

Contains fluorinated greenhouse gases.

MANUFACTURER:
MITSUBISHI ELECTRIC CORPORATION
AIR-CONDITIONING & REFRIGERATION SYSTEMS WORKS
5-66, TEBIRA, 6-CHOME, WAKAYAMA CITY, JAPAN
MADE IN JAPAN

This product is designed and intended for use in the residential, commercial and light-industrial environment.

The product at hand is based on the following EU regulations:

- Low Voltage Directive 2014/35/EU
- Electromagnetic Compatibility Directive 2014/30/EU
- Pressure Equipment Directive 2014/68/EU
- Machinery Directive 2006/42/EC
- Restriction of Hazardous Substances 2011/65/EU
- Energy-related Products Directive 2009/125/EC (with Regulation No.2016/2281, 327/2011)

The product at hand is based on the following UK regulations:

- Electrical Equipment Safety Regulations 2016
- Electromagnetic Compatibility Regulations 2016
- Pressure Equipment (Safety) Regulations 2016 (SI 2016 No. 1105)
- Supply of Machinery (Safety) Regulations 2008
- The Restriction of the Use of Certain Hazardous Substances in Electrical and Electronic Equipment Regulations 2012
- The Ecodesign for Energy-Related Products and Energy Information (Amendment) (EU Exit) Regulations 2019

Please be sure to put the contact address/telephone number on this manual before handing it to the customer.

MITSUBISHI ELECTRIC CORPORATION

HEAD OFFICE: TOKYO BLDG., 2-7-3, MARUNOUCHI, CHIYODA-KU, TOKYO 100-8310, JAPAN
MANUFACTURER: MITSUBISHI ELECTRIC CORPORATION AIR-CONDITIONING & REFRIGERATION SYSTEMS WORKS
5-66, TEBIRA 6 CHOME, WAKAYAMA-CITY, 640-8686, JAPAN

WT09973X01